MINUTES

ORDINARY COUNCIL MEETING

23RD SEPTEMBER 2014

COMMENCING AT 7:30 PM

COUNCIL CHAMBERS
THE TOWN OF NARROGIN
89 EARL STREET
NARROGIN, WA 6312

Meaning of and CAUTION concerning Council's "In Principle" support:

When Council uses this expression it means that: (a) Council is generally in favour of the proposal BUT is not yet willing to give its consent; and (b) Importantly, Council reserves the right to (and may well) either decide against the proposal or to formally support it but with restrictive conditions or modifications.

Therefore, whilst you can take some comfort from Council's "support" you are clearly at risk if you act upon it before Council makes its actual (and binding) decision and communicates that to you in writing.

Disclaimer:

"Warning - Verbal Information & Advice: Given the inherent unreliability and uncertainty that surrounds verbal communication, the Town strongly recommends that, if a matter is of importance to you, then you should NOT act upon or otherwise rely upon any VERBAL information or advice you receive from the Town unless it is first confirmed in writing."

ORDINARY COUNCIL MEETING MINUTES

23rd September 2014

1. OFFICIAL OPENING/ANNOUNCEMENT OF VISITORS

Meeting was opened by the Mayor at 7:30pm.

2. RECORD OF ATTENDANCE/APOLOGIES/APPROVED LEAVE OF ABSENCE

Attendance

Mayor Ballard
Cr Mc Kenzie
Cr Kain
Cr Schutz
Cr Russell
Cr Bartron
Mr Aaron Cook – Chief Executive Officer
Mr Colin Bastow – Director of Corporate and Community Services
Mr Brian Robinson – Director of Technical and environmental Services.
Ms Susan Guy Manager Leisure and Culture

Apologies

Cr Ward – Approved Leave of absence.
Cr Paternoster – Apologies were provided for this meeting.

3. DECLARATION OF INTEREST BY ELECTED MEMBERS AND COUNCIL EMPLOYEES IN MATTERS INCLUDED IN THE MEETING AGENDA

- Cr Mckenzie – 10.2.344 financial interest due to holding a paid honorarium position on the committee.
- Cr Kain – 10.2.344 raise the point that he sponsors the Hockey Association; however, receives no benefit from this project.
- Mayor Ballard – 10.1.342 financial interest as Ballard's of Narrogin sold the shed to the applicant.

4. RESPONSE TO PREVIOUS PUBLIC QUESTIONS TAKEN ON NOTICE

Nil

5. PUBLIC QUESTION TIME

Nil

6. APPLICATIONS FOR LEAVE OF ABSENCE

Nil

7. CONFIRMATION OF MINUTES OF PREVIOUS MEETINGS

Council Resolution: 0914.128

Moved: Cr McKenzie **Seconded: Cr Russell**

That Council:

Accept the minutes of the Ordinary Council Meeting held on 9th September, 2014 and be confirmed as an accurate record of proceedings.

CARRIED 6/0

8. ANNOUNCEMENTS BY THE PERSON PRESIDING WITHOUT DISCUSSION

9. PETITIONS/DEPUTATIONS/PRESENTATIONS/SUBMISSIONS

10. MATTERS WHICH REQUIRE DECISIONS

Table of Contents

10.1 DEVELOPMENT AND TECHNICAL SERVICES 3

10.1.342 PROPOSED OVERSIZE OUTBUILDING – NO 19 (LOT 51) FOX STREET, NARROGIN 3

10.1.343 FINAL ADOPTION OF FOXES LAIR MANAGEMENT PLAN 7

10.2 CORPORATE AND COMMUNITY SERVICES 13

10.2.344 UPPER GREAT SOUTHERN HOCKEY ASSOCIATION DEPARTMENT OF SPORT AND RECREATION SUBMISSION FOR FUNDING 13

10.2.345 RURAL COMMUNITY SUPPORT SERVICES REQUEST FOR SPONSORSHIP 16

10.2.346 LEASE OF OLD DEPOT SITE (EX GREENLINE AG SITE) 21

10.2.347 TOWN AND SHIRE OF NARROGIN BOUNDARY CHANGE 24

10.2.348 ACCOUNTS FOR AUTHORISATION – AUGUST 2014 27

10.2.349 MONTHLY FINANCIAL REPORTS – AUGUST 2014 43

11. ELECTED MEMBER'S MOTIONS OF WHICH PREVIOUS NOTICE HAS BEEN GIVEN 45

12. NEW BUSINESS OF AN URGENT NATURE APPROVED BY THE PERSON PRESIDING OR BY DECISION OF THE MEETING 45

13. CLOSURE OF MEETING 45

10.1 DEVELOPMENT AND TECHNICAL SERVICES

The Mayor called for nominations for a replacement chairman for this item due to the Mayors declaration with Cr Bartron nominating.

Council Resolution: 0914.129

Moved: Cr Schutz **Seconded Cr McKenzie**

That Cr Bartron be accepted to assume the chairman's role for the next item due to the Mayors interest in the matter.

CARRIED 6/0

Please Note: Mayor Ballard departed the meeting at 7:35pm and Cr Barton Assumed the chairman's role.

10.1.342 PROPOSED OVERSIZE OUTBUILDING – NO 19 (LOT 51) FOX STREET, NARROGIN

File Reference: **A105251**
Disclosure of Interest: **Nil**
Applicant: **SC Pattullo & AG Melvin**
Previous Item Nos: **Nil**
Date: **17th September 2014**
Author: **Brian Robinson, Director Tech & Environmental services**

Attachments:

Application for Planning Consent for proposed outbuilding

Summary:

Council is requested to consider granting planning consent for a proposed oversize outbuilding prior to the completion of a dwelling on the property.

Background:

The subject land is a 2,980m² battle-axe lot located on the northern side of Fox Street in the north east portion of the Townsite. Although the property is currently vacant, a building license was granted to the construction of a single storey dwelling on the property in late July 2014.

Approval is now being sought to construct a 7.5m wide, 12m long shed with a 2.4 metre wall height. Discussions with the applicant indicate that the outbuilding will be used as secure storage to facilitate the construction of a home on the property. The owners anticipate that the house slab will be poured within the next 7-10 days.

Plans submitted in support of the application detail that if approved, the outbuilding will be located in the north east corner of the property. A setback of 1-2 metres are proposed to the eastern side boundary. Although the plans do not specify a setback to the rear boundary, they

indicate that the shed will be setback 2 metres north of an easement that traverses the site. An 8m rear setback would result.

A copy of the submitted application is shown attached.

Comment:

The provisions of Town Planning Scheme No 2 include the subject land within the Single Residential Zone. A "Single Storey House" (and at its associated outbuildings) are a permitted use, subject to compliance with development standards.

As detailed in clause 3.4.9 of TPS No 2, within the Single residential Zone, an outbuilding of non-masonry construction is permitted, provided that it does not exceed 55m² in area. Approval to the proposed 90m² shed will therefore require a relaxation of Scheme standards.

Council has adopted Development Services Policy No 8 to guide the assessment of applications for oversized outbuildings (greater than 75m² of outbuilding). As detailed in that Policy, a maximum size outbuilding of 10% may permitted under delegated authority. With the subject land having an area of 2,980m², the proposed development complies with the Policy.

The above said, this application has not been processed under delegated authority given the requirements clause 3.4.9(v) of the Scheme, which are detailed in the Statutory Environment Section below.

In terms of the proposed setbacks, the application complies with both front and rear setbacks. As detailed in the Residential Design Codes of Western Australia, a minimum setback of 1.5metres should be required to the eastern side boundary given the proposed 12 metre wall length.

Consultation:

Chief Executive Officer – Aaron Cook

Statutory Environment:

Council's prior planning consent is required to the development in accordance with clause 6.1 of the Scheme given that the application does not strictly comply with all aspects of the Scheme.

Pursuant to clause 3.4.9(v) of the Scheme, *"No planning consent will be granted for any outbuildings on any residential zoned lot which does not contain a residence"*. Although a building license has been issued, a home does not yet exist on the property.

In accordance with clause 6.2.1, where an application does not comply with a standard or requirement prescribed by the Scheme, "*Council may approve the application unconditionally or subject to such conditions as the Council thinks fit, always provided that Council is satisfied that:*

a) *Approval of the proposed development would be consistent with the orderly and proper planning of the locality, the preservation of the amenity of the area and be consistent with the objectives of the Scheme;*

b) *The non-compliance will not have any adverse effect upon the occupiers of users of the development or the inhabitants of the locality or upon the likely future development of the locality; and*
c) *The spirit and purpose of the requirements or standards will not be reasonably departed from thereby."*

In this case, it is the authors opinion that the intent of clause 3.4.9 was to prevent the construction of a shed prior to the existence of a dwelling in order to:

i) Protect the visual amenity of the adjacent residential properties and the street;
ii) Ensure inappropriate activities are not undertaken so as not to disturb the amenity of the adjacent area (ie a shed being used for a business); and
iii) Prevent outbuildings used for habitable purposes.

In this case, the erection of a shed prior to a dwelling is unlikely to result in any detrimental visual impacts given the size and battle-axe nature of the property. It is the authors opinion that Council may ensure that the intent of clause 3.4.9 (v) is observed through the imposition of appropriate conditions. Relaxation of clause 3.4.9(v) is therefore recommended.

Policy Implications:

Nil

Financial Implications:

The required Planning Application fee of $147.00 has been paid in accordance with the Town of Narrogin's adopted budget for the 2014/15 financial year.

Strategic Implications:

By approving the application Council may be setting a precedent for similar future applications where a building license has been issued for the construction of a dwelling.

Voting Requirements:

Simple Majority

Council Resolution: 0914.130

Moved Cr Kain **Seconded Cr Schutz**

That Council grant planning consent to the proposed Oversize Garage/Shed on No 19 (Lot 51) Fox Street, Narrogin subject to compliance with the following conditions:

1. The development hereby approved shall occur generally in accordance with the plans and specifications submitted with the application and these shall not be altered or modified without the prior written approval of the Town of Narrogin.

2. The development being setback a minimum of 1.5 metres from the side boundary.

3. Construction of the outbuilding hereby approved shall not commence prior to the completion of the dwelling slab approved under Building Permit No NGN1415011.

4. All drainage run-off associated with the development hereby approved shall be contained on site or connected to the Council's stormwater drainage system to the satisfaction of the Town of Narrogin.

5. Unless otherwise approved by Council, the outbuilding hereby approved shall be used for domestic purposes only including the storage, garaging of vehicles or other approved purposes associated with the property, excluding human habitation.

6. Uses and activities undertaken within the outbuilding shall be undertaken so as not to disturb the residents of the development or the wider locality.

7. This approval shall expire if the development hereby permitted is not completed within two years of the date hereof, or within any extension of that time which, upon written application (made before or within 21 days after the expiry of the approval) to the Town, is granted by it in writing.

Advice to Applicant:

1. Any use, additions to and further intensification of any part of the development or land which is not in accordance with the original application or conditions of approval shall be subject to a further development application and consent for that use.

2. The applicant is encouraged to consider connecting the roof of the proposed outbuilding to an appropriate size rainwater storage tank to limit the impact of stormwater.

CARRIED 5/0

Please note: Cr Bartron relinquished the chairman role back to the Mayor who re-entered the meeting at 7:39pm. Mayor Ballard thanked Cr Bartron for taking the role of Chairman for the last item.

Town of Narrogin
RECEIVED
Directed to Brian
2 SEP 2014
Ref No. IPA144233
Property File A105251
Subject File 1.4.1
C Print No.

Town of Narrogin

TOWN PLANNING SCHEME NO. 2
DISTRICT SCHEME

APPLICATION FOR PLANNING CONSENT

I/We SUSAN CHRISTINE PATTULLO & ASHLEY GORDON MELVIN
(Full Name of Applicant)

of 1-17 FOX ST NARROGIN Postcode 6312
(Address for Correspondence)

hereby apply for planning consent to:

(1) use the land described hereunder for the purpose of

_____

(2) erect, alter or carry out development on land described hereunder in accordance with the accompanying plans (3 copies attached).

The existing use of the land is: VACANT - RESIDENTIAL

_____

The approximate cost of the proposed development is: $ 10,300

The estimated time of completion is: 4 months

The approximate number of persons to be housed/ employed when the development is completed is: 2

TITLES OFFICE DESCRIPTION OF LAND

LOCALITY PLAN (Indicate distance to nearest intersecting street)

HOUSE NO: 19 STREET: FOX ST

LOT NO: 51 PLAN OR DIAG: _____

LOCATION NO: _____

CERTIFICATE OF TITLE: VOLUME: 2687 FOLIO: 292

LOT DIMENSIONS

SITE AREA: 2980 square metres

FRONTAGE: 38.65 metres

DEPTH: 65.33 metres

AUTHORITY

SIGNATURE OF APPLICANT:_____ DATE: 1.9.14

NOTE: WHERE THE APPLICANT IS NOT THE OWNER THE OWNER'S SIGNATURE IS REQUIRED.

NOTE: NOTE: ALL OWNERS OF THE PROPERTY MUST SIGN THIS APPLICATION FORM. WHERE PROPERTY IS OWNED BY A COMPANY, AT LEAST TWO DIRECTORS OF THE COMPANY MUST SIGN THE APPLICATION.

SIGNATURE OF OWNER:_____ DATE:_____

NOTE: THIS FORM IS TO BE SUBMITTED IN DUPLICATE, TOGETHER WITH THREE COPIES OF PLANS, COMPRISING THE INFORMATION SPECIFIED IN THE PARTICULARS REQUIRED WITH APPLICATION OUTLINED BELOW.

THIS IS NOT AN APPLICATION FOR A BUILDING LICENCE

PARTICULARS REQUIRED WITH APPLICATION FOR PLANNING CONSENT

Where an application involves the erection or alteration of a building or a change in levels of a site, the plans accompanying an application for planning consent shall, unless specifically exempted by the Council:

(a) indicate the position and describe the existing buildings and improvements on the site and indicate those which are to be removed;

(b) indicate the position and describe the buildings and improvements proposed to be constructed, their appearance, height and proposed uses in relation to existing and proposed contours;

(c) indicate the position, type and height of all existing trees on the site and indicate those to be retained and those to be removed;

(d) indicate the areas to be landscaped and the location and type of shrubs, trees and other treatment proposed;

(e) indicate site contours and details of any proposed alteration to the natural contour of the area;

(f) indicate car parking areas, their layout and dimensions and accessways and the position of existing and/or proposed crossovers; and

(g) indicate site dimensions and be to metric scale.

FOR OFFICE USE ONLY

File Reference:_____

Application Number:_____

Date Received:_____

Date of Approval / Refusal:_____

Date of Notice of Decision:_____

FIELDERS
Endurance
STRUCTURES

" Get Serious About Sheds "

CARPORTS. GARAGES. FARM SHEDS. INDUSTRIAL BUILDINGS.

Submit by Email Print Form

REGION A 7.5m PREMIER GARAGE - OPEN SIDED

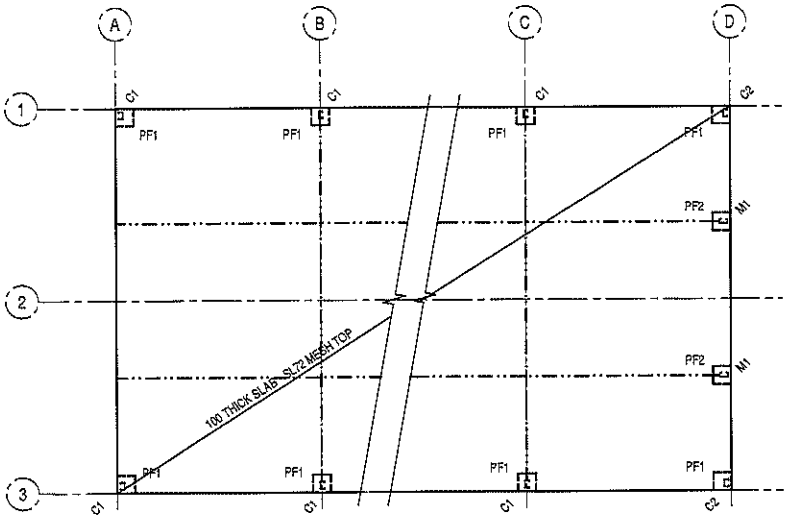

FOOTING & SLAB PLAN

1:100

PROVIDE SAWN JOINTS IN SLAB AT 4000 MAX CTRS.
PROVIDE CONTROL JOINTS IN SLAB AT 16000 MAX CTRS.
REFER TO TYPICAL DETAILS.

THIS DRAWING SHALL BE READ IN CONJUNCTION WITH ALL OTHER CONSULTANTS DRAWINGS & SPECIFICATIONS.
ALL DIMENSIONS ARE IN MILLIMETRES. DO NOT SCALE THESE DRAWINGS.
THE DIMENSIONS MAY VARY FROM THESE STANDARD DRAWINGS. IT IS THE BUILDERS RESPONSIBILITY TO VERIFY ALL DIMENSIONS.
THE STRUCTURE SHALL BE MAINTAINED IN A STABLE CONDITION DURING ERECTION. WITH NO PARTS BEING OVERSTRESSED.

CERTIFICATION

THIS DRAWING IS ONLY VALID IF ISSUED WITH NO MANUAL AMENDMENTS OR ALTERATIONS. AND BEARS AN ORIGINAL CERTIFYING SIGNATURE.

DESIGN

THIS STRUCTURE HAS BEEN DESIGNED IN ACCORDANCE WITH THE FOLLOWING STANDARDS:
- AS/NZS1170.1 - Dead & Live Loads
- AS/NZS1170.2 - Wind Loads (Regions A1-A7, Terrain Category 2 & 3)
- AS/NZS4600 - Cold-formed Steel Structures
- AS1397 - Steel Sheet & Strip

ROOF PITCH RANGE 7.5 - 15.0 DEGREES.

STRUCTURAL STEEL

ALL STRUCTURAL STEEL FRAMING SHALL BE MANUFACTURED FROM BHP HI-TENSILE STEEL (G450) CONFORMING TO AS1397. UNLESS NOTED OTHERWISE (UNO).
ALL BOLTS SHALL BE M16 8.8/S, & TEKS SCREWS SHALL BE No 12-14x20, UNO.
8.8/S BOLTS SHALL BE SNUG TIGHTENED UNO.
PURLINS & GIRTS TO BE LAPPED AT R1 RAFTERS & C1 COLUMNS AS PER MANUFACTURER'S SPECIFICATIONS.
ALL SHEETING SHALL BE FIXED AS PER MANUFACTURER'S SPECIFICATIONS.

FOUNDATION MATERIAL

NO GEOTECHNICAL INVESTIGATION HAS BEEN CARRIED OUT, UNO.
THE SITE IS ASSUMED TO HAVE A MINIMUM SAFE BEARING CAPACITY OF 100 kPa.
ONLY DENSE SAND & CLAY SOIL FOUNDATION TYPES ARE COVERED BY THESE DRAWINGS. IF DIFFERENT SITE CONDITIONS ARE ENCOUNTERED THEN THE DESIGN MAY REQUIRE MODIFICATION.
THE EXCAVATED SUB GRADE SHALL BE COMPACTED BY A MIN. OF 6 PASSES WITH A VIBRATING ROLLER (10 t MIN.). THE SUB GRADE SHALL BE COMPACTED TO A MIN. OF 100% STANDARD DRY DENSITY RATIO WITHIN 2% OF THE OPTIMUM MOISTURE CONTENT IN ACCORDANCE WITH AS1289.

FOOTINGS & SLABS

ALL FOOTINGS SHALL BE FOUNDED IN NATURAL MATERIAL WITH ALL TOPSOIL REMOVED (150 MIN.). NO FOOTINGS SHALL BE FOUNDED ON FILL MATERIAL.
FLOOR SLABS SHALL BE POURED ON A 50 CLEAN SAND BED.
FLOOR SLABS SHALL BE 100 THICK WITH SL72 MESH TOP, UNO.
THE FLOOR SLAB HAVE BEEN DESIGN FOR A MAX. LIVE LOAD OF 3 kPa.

CONCRETE

ALL CONCRETE WORK SHALL BE IN ACCORDANCE WITH AS3600.
CONCRETE STRENGTH SHALL BE 20 MPa FOR FOOTINGS & 25 MPa FOR SLABS.
CONCRETE SHALL HAVE A MINIMUM SLUMP OF 80 & MAXIMUM AGGREGATE SIZE OF 20 (TYPE A CEMENT).
ALL SLABS SHALL BE CURED IN ACCORDANCE WITH GOOD PRACTICE.

DESIGN CRITERIA SUMMARY:
INTERNAL PRESSURE: Cpi = + 0.70, - 0.65
IMPORTANCE LEVEL: 2
ROOF PITCH: 7.5 TO 15.0 DEGREES

7.5m GARAGE - FOOTING SCHEDULE (Region A - Terrain Category 2 & 3)

MARK	SECTION DESCRIPTION	SOIL TYPE	PINNED BASE		FIXED BASE	
			Reg A, TC3	Reg A, TC2	Reg A, TC3	Reg A, TC2
PF1	PAD FOOTING (B SQ x D) (NO SLAB)	SAND	750 SQ. x 800	900 SQ. x 900	700 SQ. x 750	850 SQ. x 850
		CLAY	500 SQ. x 500	550 SQ. x 600	500 SQ. x 600	550 SQ. x 650
PF2	PAD FOOTING (B SQ x D) (NO SLAB)	SAND	800 SQ. x 850	900 SQ. x 950	800 SQ. x 850	900 SQ. x 950
		CLAY	500 SQ. x 550	550 SQ. x 600	500 SQ. x 550	550 SQ. x 600
BP1	BORED PIER (Ø x D) (NO SLAB)	SAND	450 Ø. x 1600	600 Ø. x 1700	450 Ø. x 1400	450 Ø. x 1900
		CLAY	450 Ø. x 1000	600 Ø. x 1200	450 Ø. x 900	450 Ø. x 1100
BP2	BORED PIER (Ø x D) (NO SLAB)	SAND	450 Ø. x 1800	450 Ø. x 2200	450 Ø. x 1800	450 Ø. x 2200
		CLAY	450 Ø. x 1000	450 Ø. x 1200	450 Ø. x 1000	450 Ø. x 1200
SF1	SLAB FOOTING (B SQ x D) (WITH A 100 SLAB)	SAND	700 SQ. x 700	850 SQ. x 850	700 SQ. x 750	800 SQ. x 800
		CLAY	400 SQ. x 500	500 SQ. x 550	500 SQ. x 600	550 SQ. x 650
SF2	SLAB FOOTING (B SQ x D) (WITH A 100 SLAB)	SAND	750 SQ. x 750	850 SQ. x 900	750 SQ. x 750	850 SQ. x 900
		CLAY	450 SQ. x 550	500 SQ. x 600	450 SQ. x 550	500 SQ. x 600
SP1	BORED PIER (Ø x D) (WITH A 100 SLAB)	SAND	450 Ø. x 1300	600 Ø. x 1500	450 Ø. x 1100	450 Ø. x 1700
		CLAY	450 Ø. x 900	600 Ø. x 1200	450 Ø. x 800	450 Ø. x 1000
SP2	BORED PIER (Ø x D) (WITH A 100 SLAB)	SAND	450 Ø. x 1500	450 Ø. x 2000	450 Ø. x 1500	450 Ø. x 2000
		CLAY	450 Ø. x 1000	450 Ø. x 1100	450 Ø. x 1000	450 Ø. x 1100

A3 ORIGINAL SIZE

REV.	AMENDMENT DESCRIPTION	DATE
D	GENERALLY REVISED	04.12.09
C	RIGID BASE AND KNEE BRACE OPTION ADDED	17.08.09
B	GENERALLY REVISED	14.07.09
A	ISSUED FOR CONSTRUCTION	20.06.08

ECLIPSE CONSULTING ENGINEERS
ECLIPSE Consulting Engineers Pty Ltd
304/12 Century Circuit
Norwest Central
BAULKHAM HILLS NSW 2153
Phone : (02) 9894 8599
Fax : (02) 8859 0212
info@eclipse-consulting.com.au
www.eclipse-consulting.com.au
Stephen W Hissey
BE(Hons) MIEAust CPEng
RBP(EC-2199) APEQ(5548) ABP(CC40056)
Approved:

CLIENT: FIELDERS Endurance STRUCTURES

PROJECT: Susan Pattullo
SITE ADDRESS: 19 Fox St, Narrogin, WA
REF No. BONLB20011

BUILDING TYPE: 7.5m SPAN PREMIER GARAGE 7.5° to 15° ROOF PITCH 4.0m Bays - OPEN SIDED Region A1 - A7, TC2 & TC3
FOOTING & SLAB PLAN

DESIGN: SWH | SHEET No: 1
DRAWN: JLM | No. IN SET: 7
DATE: JUN 2008 | SCALE: 1:100
DRG No. 5305 - S01 - D

REGION A 7.5m PREMIER GARAGE - OPEN SIDED

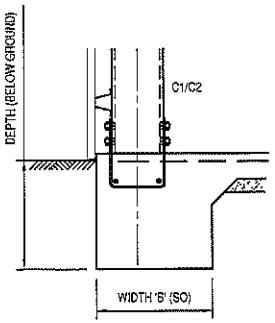

ALTERNATIVE CAST-IN BRACKET DETAIL #1
1:20

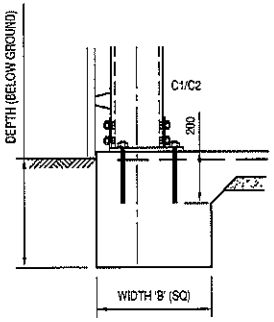

ALTERNATIVE RIGID BRACKET DETAIL #2
1:20

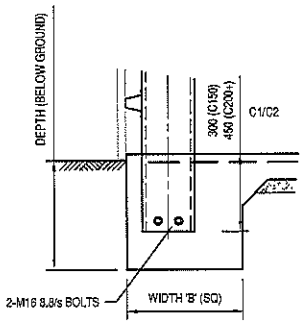

ALTERNATIVE COLUMN TO FOOTING DETAIL #3
1:20

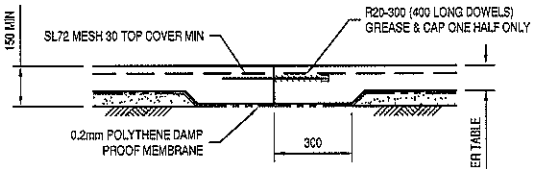

TYPICAL CONTROL JOINT DETAIL
1:20
CONTROL JOINTS TO BE AT 16000 MAX CTRS

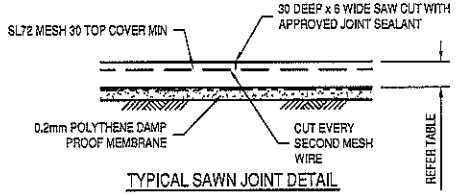

TYPICAL SAWN JOINT DETAIL
1:20
SAWN JOINTS TO BE AT 4000 MAX CTRS

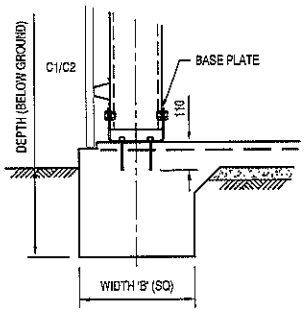

TYPICAL SLAB FOOTING DETAIL
1:20

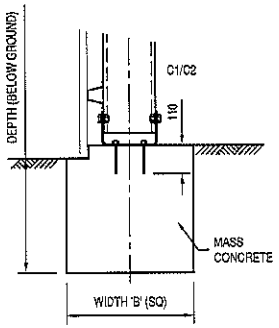

TYPICAL PAD FOOTING DETAIL
1:20

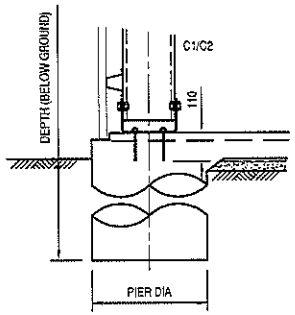

TYPICAL BORED PIER DETAIL (WITH SLAB)
1:20

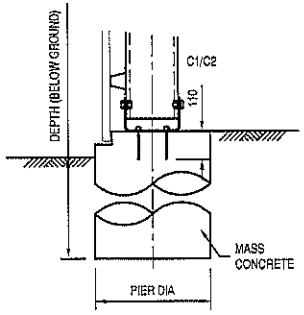

TYPICAL BORED PIER DETAIL (WITHOUT SLAB)
1:20

A3 ORIGINAL SIZE

REV.	AMENDMENT DESCRIPTION	DATE
D	GENERALLY REVISED	04.12.09
C	RIGID BASE AND KNEE BRACE OPTION ADDED	17.06.09
B	GENERALLY REVISED	14.07.09
A	ISSUED FOR CONSTRUCTION	20.06.08

ECLIPSE | CONSULTING ENGINEERS
ECLIPSE Consulting Engineers Pty Ltd
304/12 Century Circuit
Norwest Central
BAULKHAM HILLS NSW 2153
Phone : (02) 9894 8500
Fax : (02) 8850 0212
info@eclipse-consulting.com.au
www.eclipse-consulting.com.au
Stephen W Hadley
BE(Hons) MIEAust CPEng
RBP(EC-2169) RPEQ(5546) ABP(CC4000P)
Approved :

CLIENT: FIELDERS Endurance STRUCTURES

PROJECT:	Susan Pattullo
SITE ADDRESS:	19 Fox St, Narrogin, WA
REF No.	BONLB20011
BUILDING TYPE:	7.5m SPAN PREMIER GARAGE 7.5° to 15° ROOF PITCH 4.0m Bays - OPEN SIDED Region A1 - A7, TC2 & TC3
	FOOTING & SLAB DETAILS
DESIGN: SWH	SHEET No: 2
DRAWN: JLM	No. IN SET: 7
DATE: JUN 2008	SCALE: 1:20
DRG No.	5305 - S02 - D

2 MULLIONS WITH CENTRAL ROLLER DOOR

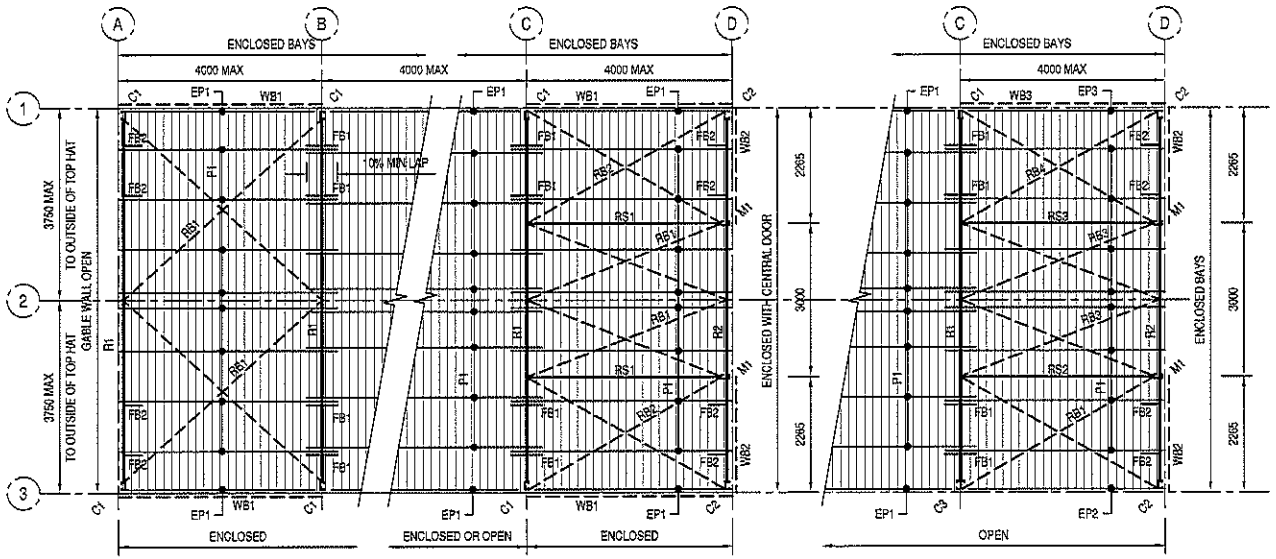

ROOF FRAMING MARKING PLAN - GABLE WALL OPEN
1:100
2 BAYS BRACED MINIMUM

ROOF FRAMING MARKING PLAN - SIDE WALL OPEN
1:100
2 BAYS BRACED MINIMUM

FRAME MEMBER SCHEDULE - OPEN SIDED STRUCTURE - 4.0m BAYS						
MARK	ITEM	WALL HEIGHT	Region A1-A7, TC3		Region A1-A7, TC2	
			PINNED	RIGID	PINNED	RIGID
C1	COLUMN	3000	C20024	C15024	C25024	C20024
		3600	C20024	C15019	C30024	C15019
		4200	C25024	C15019	C30024	C15024
		4800	C30024	C15024	C30030	C20024
		6000	C30030	C25024	C40030	C25024
C2	COLUMN	3000	C15012	C15012	C15012	C15012
		3600	C15012	C15012	C15015	C15015
		4200	C15015	C15015	C15019	C15019
		4800	C15019	C15019	C15024	C15024
		6000	C20024	C20024	C25024	C25024
C3	COLUMN	3000	2-C20024	2-C15024	2-C25024	2-C20024
		3600	2-C20024	2-C15019	2-C30024	2-C15024
		4200	2-C25024	2-C15024	2-C30024	2-C20019
		4800	2-C30024	2-C20019	2-C30030	2-C25024
		6000	2-C30030	2-C30024	2-C40030	2-C30024
R1	RAFTER	3000	C20024	C15024	C25024	C20024
		3600	C20024	C15019	C30024	C15019
		4200	C25024	C15019	C30024	C15019
		4800	C30024	C15019	C30030	C20019
		6000	C30030	C25019	C40030	C25024
R2	RAFTER	3000-4800	C15012	C15012	C15012	C15012
		6000	C15012	C15012	C20015	C20015
KB	KNEE BRACE	SINGLE COLUMN	-	Z15019	-	Z15019
		DOUBLE COLUMN	-	2-C15019	-	2-C15019
M1	MULLION	3000	C15019	C15019	C15024	C15024
		3600	C15019	C15019	C15024	C15024
		4200	C15024	C15024	C20024	C20024
		4800	C20019	C20019	C20024	C20024
		6000	C20024	C20024	2-C25019	2-C25019
DM1	DOOR MULLION	3000	Z15015	Z15015	Z15019	Z15019
		3600	Z15024	Z15024	Z15024 + C15012	Z15024 + C15012
		4200 - 4800	Z15024 + C15012	Z15024 + C15012	Z15024 + C15012	Z15024 + C15012
		6000	Z15024 + C15012	Z15024 + C15012	Z15024 + C15015	Z15024 + C15015
DH1	DOOR HEADER	3000 - 3600	C15024 #	C15024 #	C15012	C15012
		4200	C15012	C15012	C15015	C15015
		4800	C15012	C15012	C15019	C15019
		6000	C15015	C15015	C15024	C15024
RS1	ROOF STRUT	3000 - 4800	C15012		C15012	
		6000	C15012		C15015	
RS2	ROOF STRUT	3000 - 6000	C15012		C15015	
RS3	ROOF STRUT	3000 - 4800	C15015		C15019	
		6000	C15019		C15024	
EP1	EAVES PURLIN	3000 - 6000	C15012		C15015	
EP2	EAVES PURLIN	3000 - 6000	C15012		C15012	
EP3	EAVES PURLIN	3000 - 6000	C15019		C15024	
RB1	ROOF BRACING	3000 - 6000	25 x 1.0 STRAP		25 x 1.0 STRAP	
RB2	ROOF BRACING	3000 - 4800	32 x 1.2 STRAP		51 x 1.5 STRAP	
		6000	32 x 1.6 STRAP		51 x 1.6 STRAP	
RB3	ROOF BRACING	3000 - 4800	25 x 1.0 STRAP		51 x 1.6 STRAP	
		6000	25 x 1.0 STRAP		2-32 x 1.5 STRAP	
RB4	ROOF BRACING	3000 - 4800	51 x 1.6 STRAP		2-51 x 1.5 STRAP	
		6000	2-32 x 1.6 STRAP		2-51 x 1.5 STRAP	
RB5	ROOF BRACING	3000 - 4800	32 x 1.2 STRAP		32 x 1.6 STRAP	
		6000	32 x 1.2 STRAP		51 x 1.5 STRAP	
RB6	ROOF BRACING	3000 - 4800	51 x 1.6 STRAP		2-51 x 1.5 STRAP	
		6000	2-51 x 1.6 STRAP		2-51 x 1.6 STRAP	
WB1	WALL BRACING	3000 - 4800	51 x 1.6 STRAP		32 x 1.5 STRAP	
		6000	2-32 x 1.6 STRAP		51 x 1.6 STRAP	
WB2	WALL BRACING	3000 - 4800	51 x 1.6 STRAP		2-32 x 1.6 STRAP	
		6000	2-32 x 1.6 STRAP		2-51 x 1.6 STRAP	
WB3	WALL BRACING	3000 - 4800	2-32 x 1.6 STRAP		2-32 x 1.6 STRAP	
		6000	2-51 x 1.6 STRAP		2-51 x 1.6 STRAP	
WB4	WALL BRACING	3000 - 4800	32 x 1.2 STRAP		32 x 1.6 STRAP	
		6000	32 x 1.6 STRAP		51 x 1.6 STRAP	
CS1	COLUMN STIFF.	3000 - 4800	C15012		C15019	
		6000	C15019		C15024	

DOOR HEADER VERTICAL (REFER TO DETAIL ON DRAWING CD04)

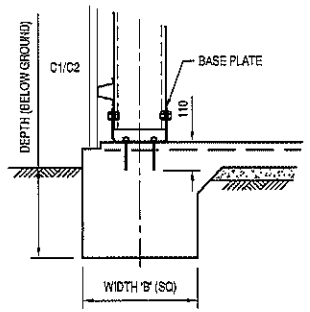

TYPICAL SLAB FOOTING DETAIL
1:20

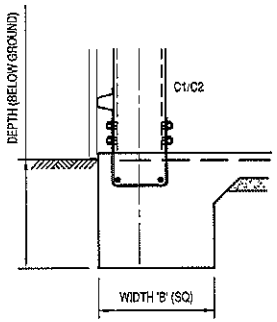

CAST-IN BRACKET DETAIL #1
1:20

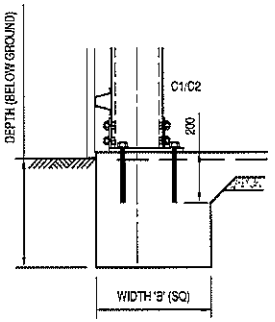

RIGID BRACKET DETAIL #2
1:20

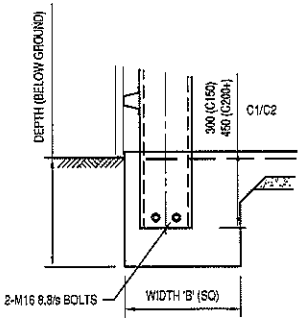

COLUMN TO FOOTING DETAIL #3
1:20

PINNED BASE OPTION

RIGID BASE OPTIONS

A3 ORIGINAL SIZE

REV.	AMENDMENT DESCRIPTION	DATE
D	GENERALLY REVISED	04.12.09
C	RIGID BASE AND KNEE BRACE OPTION ADDED	17.08.09
B	GENERALLY REVISED	14.07.09
A	ISSUED FOR CONSTRUCTION	20.06.08

ECLIPSE CONSULTING ENGINEERS
ECLIPSE Consulting Engineers Pty Ltd
20A/12 Century Circuit
Norwest Central
BAULKHAM HILLS NSW 2153
Phone : (02) 9894 8500
Fax : (02) 8850 0212
info@eclipse-consulting.com.au
www.eclipse-consulting.com.au
Stephen W Hadley
BE(Hons) MIEAust CPEng
RBP(EC-2169) RPEQ(5546) ABP(CC4030P)
Approved:

CLIENT: FIELDERS Endurance STRUCTURES

PROJECT: Susan Pattullo
SITE ADDRESS: 19 Fox St, Narrogin, WA
REF No. BONLB20011

BUILDING TYPE: 7.5m SPAN PREMIER GARAGE
7.5° to 15° ROOF PITCH
4.0m Bays - OPEN SIDED
Region A1 - A7, TC2 & TC3
FRAMING PLAN

DESIGN: SWH | SHEET No: 3
DRAWN: JLM | No. IN SET: 7
DATE: JUN 2008 | SCALE: 1:100, 1:20
DRG No. 5305 - S03 - D

CENTRE MULLION DESIGN

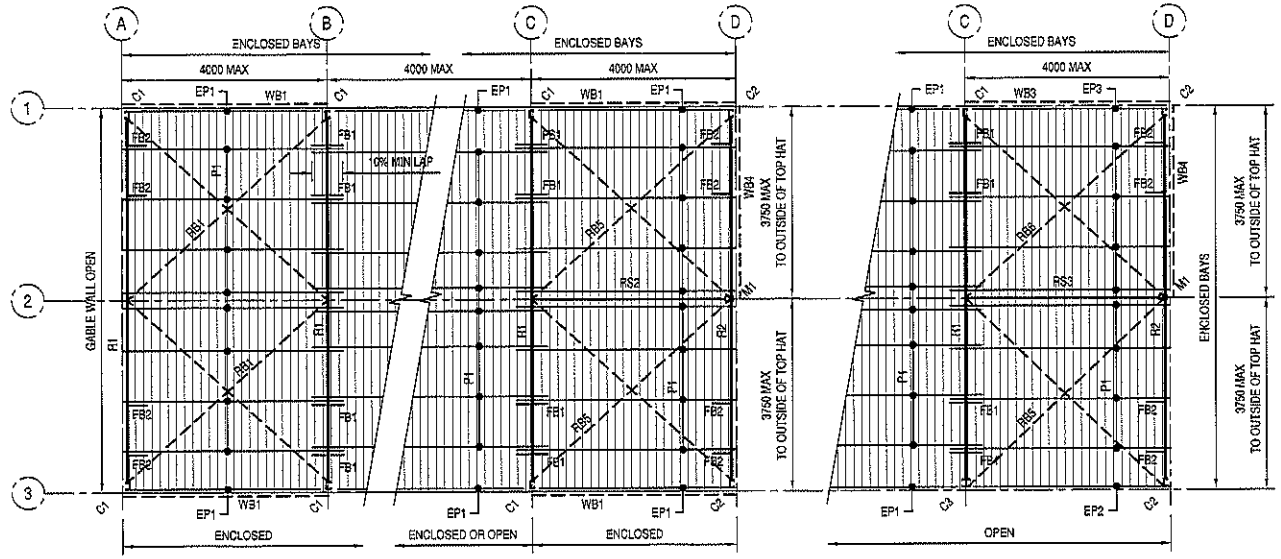

ROOF FRAMING MARKING PLAN - GABLE WALL OPEN
1:100
2 BAYS BRACED MINIMUM

ROOF FRAMING MARKING PLAN - SIDE WALL OPEN
1:100
2 BAYS BRACED MINIMUM

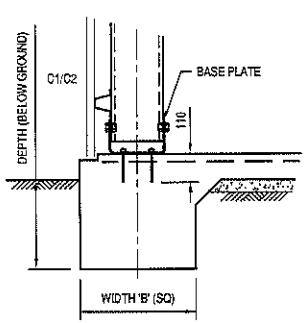

TYPICAL SLAB FOOTING DETAIL
1:20

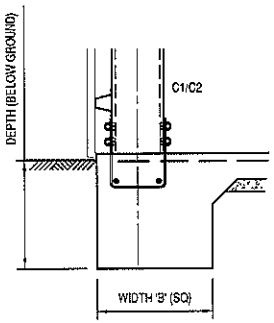

CAST-IN BRACKET DETAIL #1
1:20

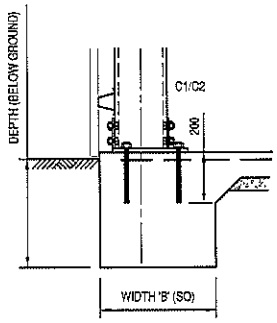

RIGID BRACKET DETAIL #2
1:20

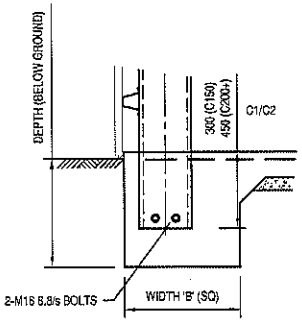

COLUMN TO FOOTING DETAIL #3
1:20

PINNED BASE OPTION

RIGID BASE OPTIONS

FRAME MEMBER SCHEDULE - OPEN SIDED STRUCTURE - 4.0m BAYS

MARK	ITEM	WALL HEIGHT	Region A1-A7, TC3		Region A1-A7, TC2	
			PINNED	RIGID	PINNED	RIGID
C1	COLUMN	3000	C20024	C15024	C25024	C20024
		3600	C20024	C15019	C30024	C15019
		4200	C25024	C15019	C30024	C15024
		4800	C30024	C15024	C30030	C20024
		6000	C30030	C25024	C40030	C25024
C2	COLUMN	3000	C15012	C15012	C15012	C15012
		3600	C15012	C15012	C15015	C15015
		4200	C15015	C15015	C15019	C15019
		4800	C15019	C15019	C15024	C15024
		6000	C20024	C20024	C25024	C25024
C3	COLUMN	3000	2-C20024	2-C15024	2-C25024	2-C20024
		3600	2-C20024	2-C15019	2-C30024	2-C15024
		4200	2-C25024	2-C15024	2-C30024	2-C20019
		4800	2-C30024	2-C20019	2-C30030	2-C25024
		6000	2-C30030	2-C30024	2-C40030	2-C30024
R1	RAFTER	3000	C20024	C15024	C25024	C20024
		3600	C20024	C15019	C30024	C15019
		4200	C25024	C15019	C30024	C15019
		4800	C30024	C15019	C30030	C20019
		6000	C30030	C25019	C40030	C25024
R2	RAFTER	3000-4800	C15012	C15012	C15012	C15012
		6000	C15012	C15012	C20015	C20015
KB	KNEE BRACE	SINGLE COLUMN	-	Z15019	-	Z15019
		DOUBLE COLUMN	-	2-C15019	-	2-C15019
M1	MULLION	3000	C15019	C15019	C15024	C15024
		3600	C15019	C15019	C15024	C15024
		4200	C15024	C15024	C20024	C20024
		4800	C20019	C20019	C20024	C20024
		6000	C20024	C20024	2-C25019	2-C25019
DM1	DOOR MULLION	3000	Z15015	Z15015	Z15019	Z15019
		3600	Z15024	Z15024	Z15024 + C15012	Z15024 + C15012
		4200 - 4800	Z15024 + C15012	Z15024 + C15012	Z15024 + C15012	Z15024 + C15012
		6000	Z15024 + C15012	Z15024 + C15012	Z15024 + C15015	Z15024 + C15015
DH1	DOOR HEADER	3000 - 3600	C15024 #	C15024 #	C15012	C15012
		4200	C15012	C15012	C15015	C15015
		4800	C15012	C15012	C15019	C15019
		6000	C15015	C15015	C15024	C15024
RS1	ROOF STRUT	3000 - 4800	C15012		C15012	
		6000	C15012		C15015	
RS2	ROOF STRUT	3000 - 6000	C15012		C15015	
RS3	ROOF STRUT	3000 - 4800	C15015		C15019	
		6000	C15019		C15024	
EP1	EAVES PURLIN	3000 - 6000	C15012		C15015	
EP2	EAVES PURLIN	3000 - 6000	C15012		C15012	
EP3	EAVES PURLIN	3000 - 6000	C15019		C15024	
RB1	ROOF BRACING	3000 - 6000	25 x 1.0 STRAP		25 x 1.0 STRAP	
RB2	ROOF BRACING	3000 - 4800	32 x 1.2 STRAP		51 x 1.6 STRAP	
		6000	32 x 1.6 STRAP		51 x 1.6 STRAP	
RB3	ROOF BRACING	3000 - 4800	25 x 1.0 STRAP		51 x 1.6 STRAP	
		6000	25 x 1.0 STRAP		2-32 x 1.6 STRAP	
RB4	ROOF BRACING	3000 - 4800	51 x 1.6 STRAP		2-51 x 1.6 STRAP	
		6000	2-32 x 1.6 STRAP		2-51 x 1.6 STRAP	
RB5	ROOF BRACING	3000 - 4800	32 x 1.2 STRAP		32 x 1.6 STRAP	
		6000	32 x 1.2 STRAP		51 x 1.6 STRAP	
RB6	ROOF BRACING	3000 - 4800	51 x 1.6 STRAP		2-51 x 1.6 STRAP	
		6000	2-51 x 1.6 STRAP		2-51 x 1.6 STRAP	
WB1	WALL BRACING	3000 - 4800	51 x 1.6 STRAP		32 x 1.6 STRAP	
		6000	2-32 x 1.6 STRAP		51 x 1.6 STRAP	
WB2	WALL BRACING	3000 - 4800	51 x 1.6 STRAP		2-32 x 1.6 STRAP	
		6000	2-32 x 1.6 STRAP		2-51 x 1.6 STRAP	
WB3	WALL BRACING	3000 - 4800	2-32 x 1.6 STRAP		2-32 x 1.6 STRAP	
		6000	2-51 x 1.6 STRAP		2-51 x 1.6 STRAP	
WB4	WALL BRACING	3000 - 4800	32 x 1.2 STRAP		32 x 1.6 STRAP	
		6000	32 x 1.6 STRAP		51 x 1.6 STRAP	
CS1	COLUMN STIFF.	3000 - 4800	C15012		C15019	
		6000	C15019		C15024	

DOOR HEADER VERTICAL (REFER TO DETAIL ON DRAWING CD04)

A3 ORIGINAL SIZE

REV.	AMENDMENT DESCRIPTION	DATE
D	GENERALLY REVISED	04.12.09
C	RIGID BASE AND KNEE BRACE OPTION ADDED	17.08.09
B	GENERALLY REVISED	14.07.09
A	ISSUED FOR CONSTRUCTION	20.06.09

ECLIPSE CONSULTING ENGINEERS
ECLIPSE Consulting Engineers Pty Ltd
304/12 Century Circuit
Norwest Central
BAULKHAM HILLS NSW 2153
Phone : (02) 9894 8500
Fax : (02) 8859 0212
info@eclipse-consulting.com.au
www.eclipse-consulting.com.au
Stephen W Hasloy
BE(Hons) MIEAust CPEng
RBP(EC-2160) RPEQ(5546) ABP(CC4009P)
Approved :

CLIENT: FIELDERS Endurance STRUCTURES

PROJECT: Susan Pattullo
SITE ADDRESS: 19 Fox St, Narrogin, WA
REF No. BONLB20011

BUILDING TYPE: 7.5m SPAN PREMIER GARAGE
7.5° to 15° ROOF PITCH
4.0m Bays - OPEN SIDED
Region A1 - A7, TC2 & TC3
FRAMING PLAN

DESIGN: SWH
DRAWN: JLM
DATE: JUN 2008
SHEET No: 4
No. IN SET: 7
SCALE: 1:100, 1:20
DRG No. 5305 - S04 - D

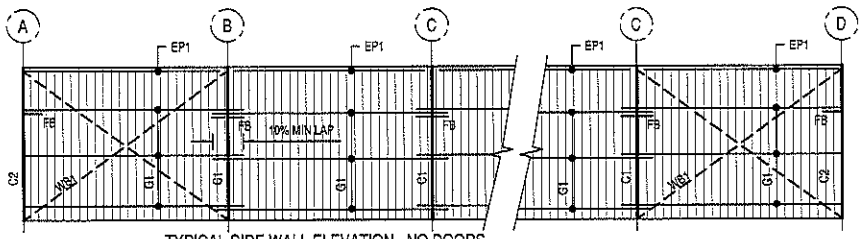

TYPICAL SIDE WALL ELEVATION - NO DOORS
1:100

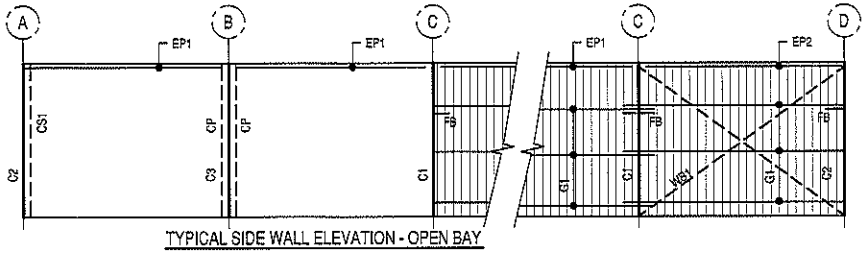

TYPICAL SIDE WALL ELEVATION - OPEN BAY
1:100
CP = COVER PLATE TO OPEN COLUMN
CS1 = COLUMN STIFFENER TO CORNER COLUMN

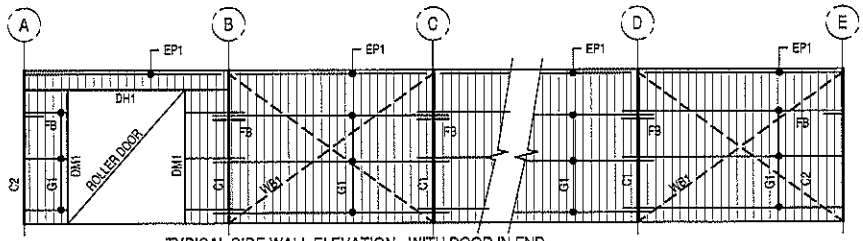

TYPICAL SIDE WALL ELEVATION - WITH DOOR IN END BAY
1:100

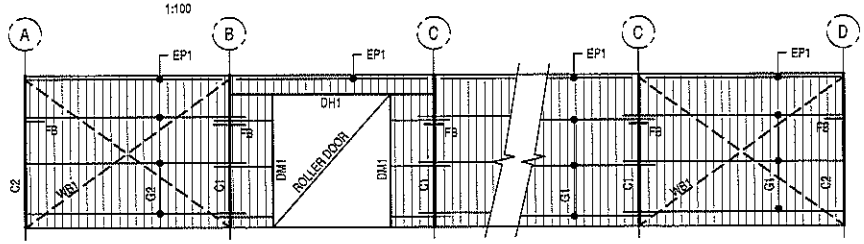

TYPICAL SIDE WALL ELEVATION - WITH DOOR IN INTERNAL BAY
1:100

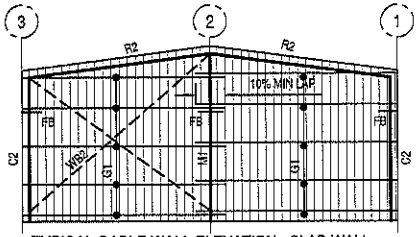

TYPICAL GABLE WALL ELEVATION - CLAD WALL
1:100

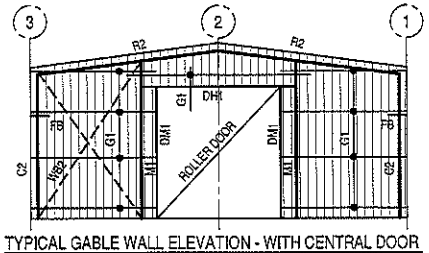

TYPICAL GABLE WALL ELEVATION - WITH CENTRAL DOOR
1:100

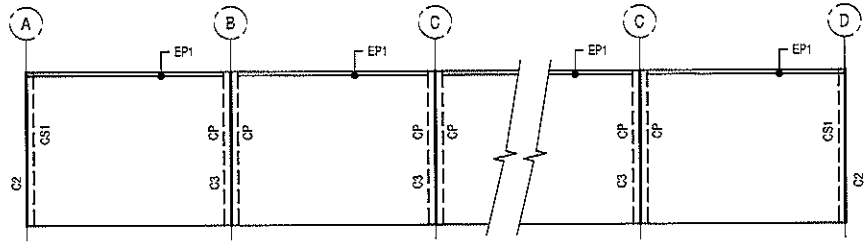

TYPICAL SIDE WALL ELEVATION - OPEN SIDED
1:100
CP = COVER PLATE TO OPEN COLUMN
CS1 = COLUMN STIFFENER TO CORNER COLUMN

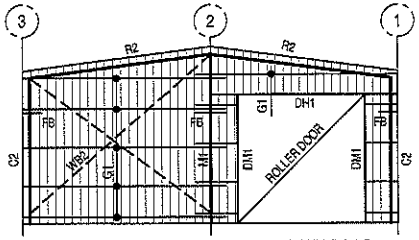

TYPICAL GABLE WALL ELEVATION - WITH DOOR
1:100

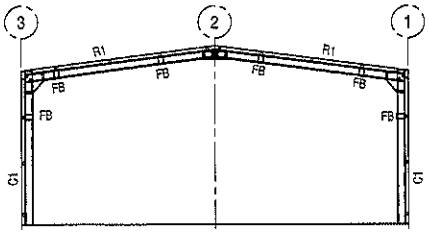

TYPICAL GABLE WALL ELEVATION - OPEN SIDED
1:100

A3 ORIGINAL SIZE

REV.	AMENDMENT DESCRIPTION	DATE
D	GENERALLY REVISED	04.12.09
C	RIGID BASE AND KNEE BRACE OPTION ADDED	17.08.09
B	GENERALLY REVISED	14.07.09
A	ISSUED FOR CONSTRUCTION	20.06.08

ECLIPSE | CONSULTING ENGINEERS
ECLIPSE Consulting Engineers Pty Ltd
304/12 Century Circuit
Norwest Central
BAULKHAM HILLS NSW 2153
Phone : (02) 9894 8500
Fax : (02) 9850 9212
Info@eclipse-consulting.com.au
www.eclipse-consulting.com.au
Stephen W Hadley
BE(Hons) MIEAust CPEng
RBP(EC-2188) RPEQ(9546) ABP(DC4050P)
Approved :

CLIENT: FIELDERS Endurance STRUCTURES

PROJECT: Susan Pattullo
SITE ADDRESS: 19 Fox St, Narrogin, WA
REF No. BONLB20011

BUILDING TYPE: 7.5m SPAN PREMIER GARAGE
7.5° to 15° ROOF PITCH
4.0m Bays - OPEN SIDED
Region A1 - A7, TC2 & TC3
ELEVATIONS

DESIGN: SWH | SHEET No: 5
DRAWN: JLM | No. IN SET: 7
DATE: JUN 2008 | SCALE: 1:100
DRG No. 5305 - S05 - D

PURLIN AND GIRT SCHEDULE - OPEN SIDED STRUCTURE								
MARK	ITEM	SPAN (mm)	MAXIMUM TOPHAT SPACINGS (mm) - 1.9mm MIN. INTERNAL FRAME MEMBER THICKNESS, 1.2mm MIN. END FRAME MEMBER THICKNESS					
			Region A1-A7, TC3			Region A1-A7, TC2		
			TH64.075	TH64.100	TH64.120	TH64.075	TH64.100	TH64.120
P1	PURLIN - 10% LAP MIN., 15° ROOF PITCH	≤3000	1130	1340	1340	720	860	860
		≤3250	970	1240	1240	620	790	790
		≤3500	830	1160	1160	530	740	740
		≤3750	720	1080	1080	460	680	690
		≤4000	610	970	1010	390	620	650
G1	GIRT - 10% LAP MIN.	≤3000	1410	1670	1670	900	1070	1070
		≤3250	1200	1540	1540	770	990	990
		≤3500	1040	1440	1440	660	920	920
		≤3750	900	1320	1350	570	850	860
		≤4000	760	1130	1170	480	720	750
G2	SINGLE SPAN GIRT	≤3000	880	1290	1690	560	820	1090
		≤3250	750	1090	1440	480	700	920
		≤3500	650	940	1240	410	600	790
		≤3750	560	820	1080	360	530	690
		≤4000	n/a	720	950	n/a	460	610

SHEETING SCHEDULE - OPEN SIDED STRUCTURE, MAXIMUM PURLIN SPACING				
POSITION	SHEETING TYPE	SPAN	Region A, TC3	Region A, TC2
ROOF	0.42 BMT S-RIB	END	900	900
		INTERNAL	1200	1200
	0.42 BMT TL-5	END	1300	1300
		INTERNAL	1900	1900
WALL	0.35 BMT S-RIB	END	1960	1700
		INTERNAL	2340	2100
		SINGLE SPAN	1730	1460
	0.35 BMT TL-5	END	2470	2190
		INTERNAL	2910	2480
		SINGLE SPAN	2100	1720
	0.35 BMT LO-RIB	END	1800	1700
		INTERNAL	1800	1800
		SINGLE SPAN	1400	1400

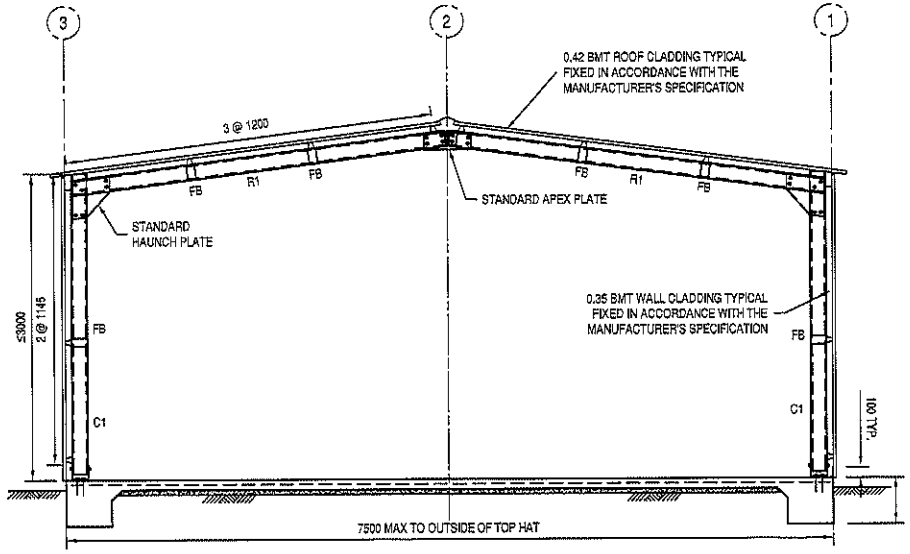

TYPICAL PORTAL FRAME
1:50

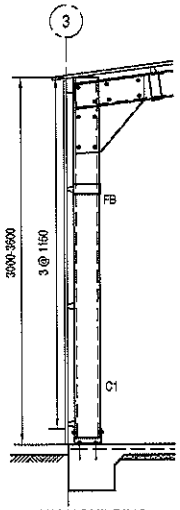

3.6m HIGH BUILDING
1:50

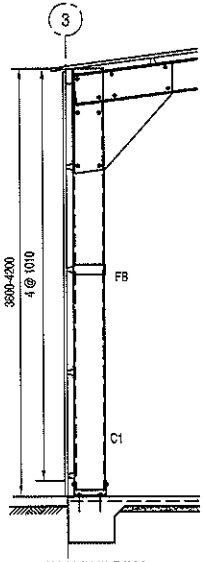

4.2m HIGH BUILDING
1:50

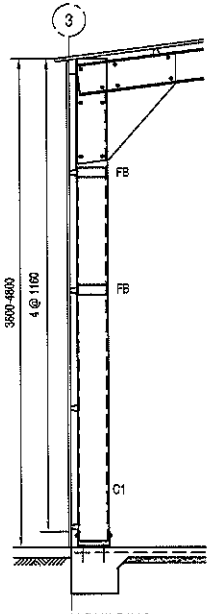

4.8m HIGH BUILDING
1:50

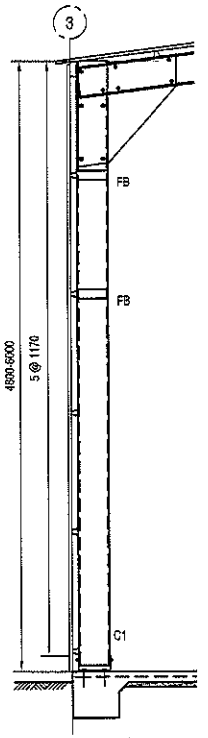

6.0m HIGH BUILDING
1:50

A3 ORIGINAL SIZE

REV.	AMENDMENT DESCRIPTION	DATE
D	GENERALLY REVISED	04.12.09
C	RIGID BASE AND KNEE BRACE OPTION ADDED	17.08.09
B	GENERALLY REVISED	14.07.09
A	ISSUED FOR CONSTRUCTION	20.06.08

ECLIPSE | CONSULTING ENGINEERS
ECLIPSE Consulting Engineers Pty Ltd
304/12 Century Circuit
Norwest Central
BAULKHAM HILLS NSW 2153
Phone : (02) 9894 8500
Fax : (02) 8850 6212
info@eclipse-consulting.com.au
www.eclipse-consulting.com.au
Stephen W Healey
BE(Hons) MIEAust CPEng
RBP(IEC-2169) RPEQ(5548) ABP(CC4230P)
Approved :

CLIENT: FIELDERS Endurance STRUCTURES

PROJECT: Susan Pattullo
SITE ADDRESS: 19 Fox St, Narrogin, WA
REF No. BONLB20011

BUILDING TYPE: 7.5m SPAN PREMIER GARAGE, 7.5° to 15° ROOF PITCH, 4.0m Bays - OPEN SIDED, Region A1 - A7, TC2 & TC3
PORTAL SECTIONS - PINNED BASE

DESIGN: SWH | SHEET No: 6
DRAWN: JLM | No. IN SET: 7
DATE: JUN 2008 | SCALE: 1:50
DRG No. 5305 - S06 - D

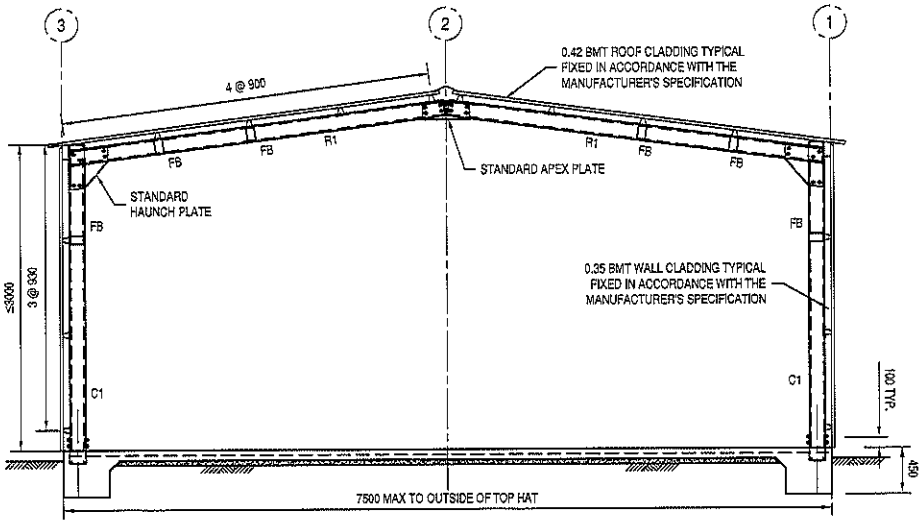

TYPICAL PORTAL FRAME - 3.0m HIGH BUILDING
1:50

PURLIN AND GIRT SCHEDULE - OPEN SIDED STRUCTURE								
MARK	ITEM	SPAN (mm)	MAXIMUM TOPHAT SPACINGS (mm) - 1.9mm MIN. INTERNAL FRAME MEMBER THICKNESS. 1.2mm MIN. END FRAME MEMBER THICKNESS					
			Region A1-A7, TC3			Region A1-A7, TC2		
			TH64.075	TH64.100	TH64.120	TH64.075	TH64.100	TH64.120
P1	PURLIN - 10% LAP MIN., 15° ROOF PITCH	≤3000	1130	1340	1340	720	860	860
		≤3250	970	1240	1240	620	790	790
		≤3500	830	1160	1160	530	740	740
		≤3750	720	1060	1080	460	680	690
		≤4000	610	970	1010	390	620	650
G1	GIRT - 10% LAP MIN.	≤3000	1410	1670	1670	900	1070	1070
		≤3250	1200	1540	1540	770	990	990
		≤3500	1040	1440	1440	660	920	920
		≤3750	900	1320	1350	570	850	860
		≤4000	760	1130	1170	480	720	750
G2	SINGLE SPAN GIRT	≤3000	880	1290	1690	560	820	1090
		≤3250	750	1090	1440	480	700	920
		≤3500	650	940	1240	410	600	790
		≤3750	560	820	1080	360	530	690
		≤4000	n/a	720	950	n/a	460	610

SHEETING SCHEDULE - OPEN SIDED STRUCTURE, MAXIMUM PURLIN SPACING				
POSITION	SHEETING TYPE	SPAN	Region A, TC3	Region A, TC2
ROOF	0.42 BMT S-RIB	END	900	900
		INTERNAL	1200	1200
	0.42 BMT TL-5	END	1300	1300
		INTERNAL	1900	1900
WALL	0.35 BMT S-RIB	END	1960	1700
		INTERNAL	2340	2100
		SINGLE SPAN	1730	1460
	0.35 BMT TL-5	END	2470	2190
		INTERNAL	2910	2480
		SINGLE SPAN	2100	1720
	0.35 BMT LO-RIB	END	1800	1700
		INTERNAL	1800	1800
		SINGLE SPAN	1400	1400

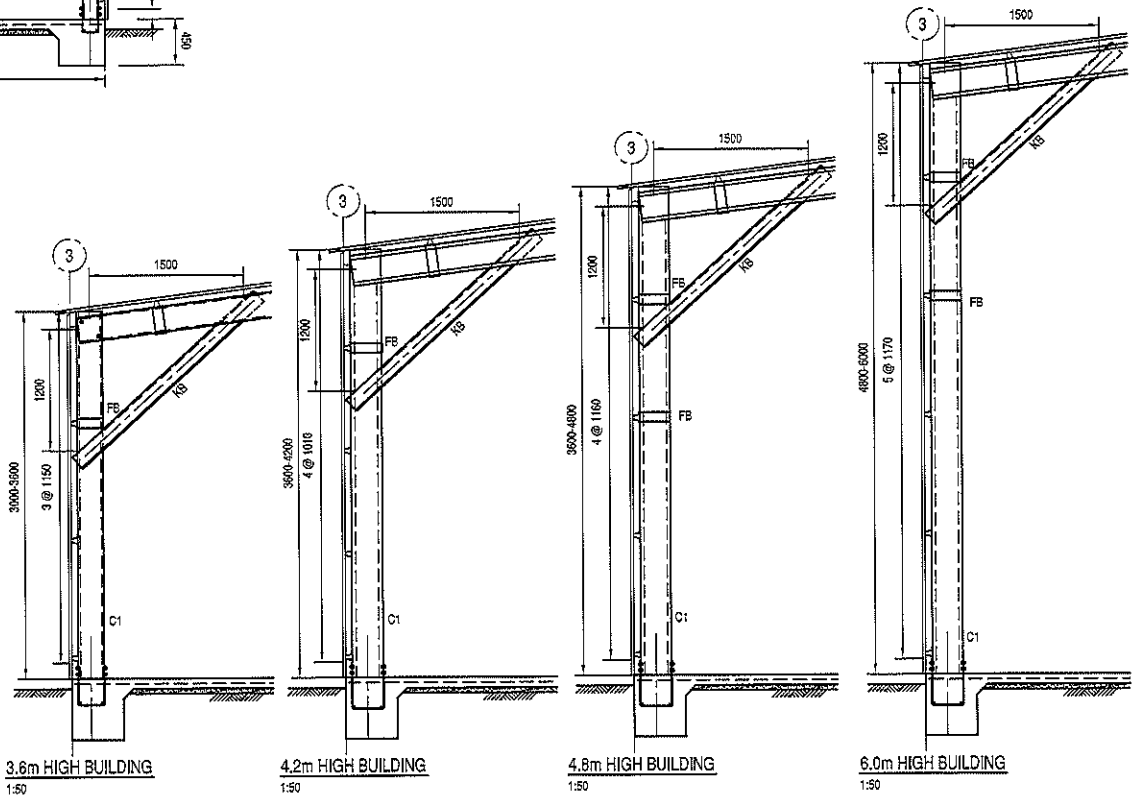

3.6m HIGH BUILDING
1:50

4.2m HIGH BUILDING
1:50

4.8m HIGH BUILDING
1:50

6.0m HIGH BUILDING
1:50

A3 ORIGINAL SIZE

REV.	AMENDMENT DESCRIPTION	DATE
D	GENERALLY REVISED	04.12.09
C	RIGID BASE AND KNEE BRACE OPTION ADDED	17.08.09
B	GENERALLY REVISED	14.07.09
A	ISSUED FOR CONSTRUCTION	20.06.08

ECLIPSE CONSULTING ENGINEERS
ECLIPSE Consulting Engineers Pty Ltd
304/12 Century Circuit
Norwest Central
BAULKHAM HILLS NSW 2153
Phone : (02) 9894 8500
Fax : (02) 8859 0212
info@eclipse-consulting.com.au
www.eclipse-consulting.com.au
Stephen W Hadley
BE(Hons) MIEAust CPEng
RBP(EC-2189) RPEQ(5546) ABP(CC40597)
Approved :

CLIENT: FIELDERS Endurance STRUCTURES

PROJECT:	Susan Pattullo
SITE ADDRESS:	19 Fox St, Narrogin, WA
REF No.	BONLB20011
BUILDING TYPE:	7.5m SPAN PREMIER GARAGE 7.5° to 15° ROOF PITCH 4.0m Bays - OPEN SIDED Region A1 - A7, TC2 & TC3
	PORTAL SECTIONS - RIGID BASE
DESIGN: SWH	SHEET No: 7
DRAWN: JLM	No. IN SET: 7
DATE: JUN 2008	SCALE: 1:50
DRG No.	5305 - S07 - D

ECLIPSE | CONSULTING ENGINEERS

Ref. : BONLB20011-001-sdc

22 August 2014

Attention: Nathan Jack

Fielders Australia
PO Box 378
MELROSE PARK SA 5039

Dear Nathan,

Engineering Certification of Structural Adequacy
Proposed 7.5m Span x 12.0m Long x 2.4m High Garage
For Susan Pattullo at 19 Fox St, Narrogin, WA
For Region A Terrain Category 2 Importance Level 2

As requested, the structural design of the above building was carried out by ECLIPSE Consulting Engineers Pty Ltd, as detailed in the following documentation:

- Eclipse drawings: 5305 - S01/D to S07/D dated June 2008
  7.5m Span Premier Garage

The structure has been designed in accordance with the following Australian Standards:

- AS/NZS 1170.0 - Structural Design Actions - Part 0 : General principles
- AS/NZS 1170.1 - Structural Design Actions - Part 1 : Permanent, imposed and other actions
- AS/NZS 1170.2 - Structural Design Actions - Part 2 : Wind action
- AS 1170.4 - Structural Design Actions - Part 4 : Earthquake actions in Australia
- AS 3600 - Concrete Structures
- AS 4100 - Steel Structures
- AS/NZS 4600 - Cold-Formed Steel Structures
- AS/NZS 1252 - High Strength Bolts

The following parameters have been used for the design of the building:

- Wind Category: Region A, Terrain Category 2, Importance Level 2
- Internal Pressures: Cpi = +0.7, -0.65
- Wind Speed Multipliers : $M_{z,cat}$ = 0.91, Ms = 1.0, Mt = 1.0
- Wind Speed (V_R*): V_R* = 45 m/s, V_{RS} = 37 m/s
- Earthquake Hazard Factor (z): 0.09
- Site Soil Classification: A, S & M

The design was found to be structurally adequate incorporating the following amendments:

- The Shed at 3.0m Bays, 2.4m High, Rigid Base shall be specified as per 4.0m Bays, 3.0m High, Rigid Base specifications with no modifications.

All other member sizes, details, etc. shall be in accordance with the above documentation.

I hereby certify, for & on behalf of ECLIPSE Consulting Engineers Pty Ltd, that the structural design of the above buildings has been carried out in accordance with the Building Code of Australia. I certify that the above referenced building will be structurally adequate for its intended purpose when constructed in accordance with the above nominated documents incorporating the nominated changes and adopting good construction practices.

I certify that I am a fully qualified and practising structural engineer in accordance with the requirements of the Building Code of Australia and The Institution of Engineers, Australia.

Yours faithfully,
ECLIPSE Consulting Engineers Pty Ltd

Stephen Healey
BE(Hons) MIEAust CPEng
PRINCIPAL

Eclipse Consulting Engineers Pty Ltd
304/12 Century Cct,
Norwest Central,
BAULKHAM HILLS NSW 2153

Phone : (02) 9894 8500
Fax : (02) 8850 0212
info@eclipse-consulting.com.au
www.eclipse-consulting.com.au

LANDGATE COPY OF ORIGINAL NOT TO SCALE Tue Sep 3 09:36:45 2013 JOB 42669461

VER	AMENDMENT	BY	SIGNATURE	DATE
2	INTERESTS & NOTIFICATIONS RIGHT OF CARRIAGEWAYS	P. GOW		21-Jan-08

LIMITED IN DEPTH TO 60.96 METRES

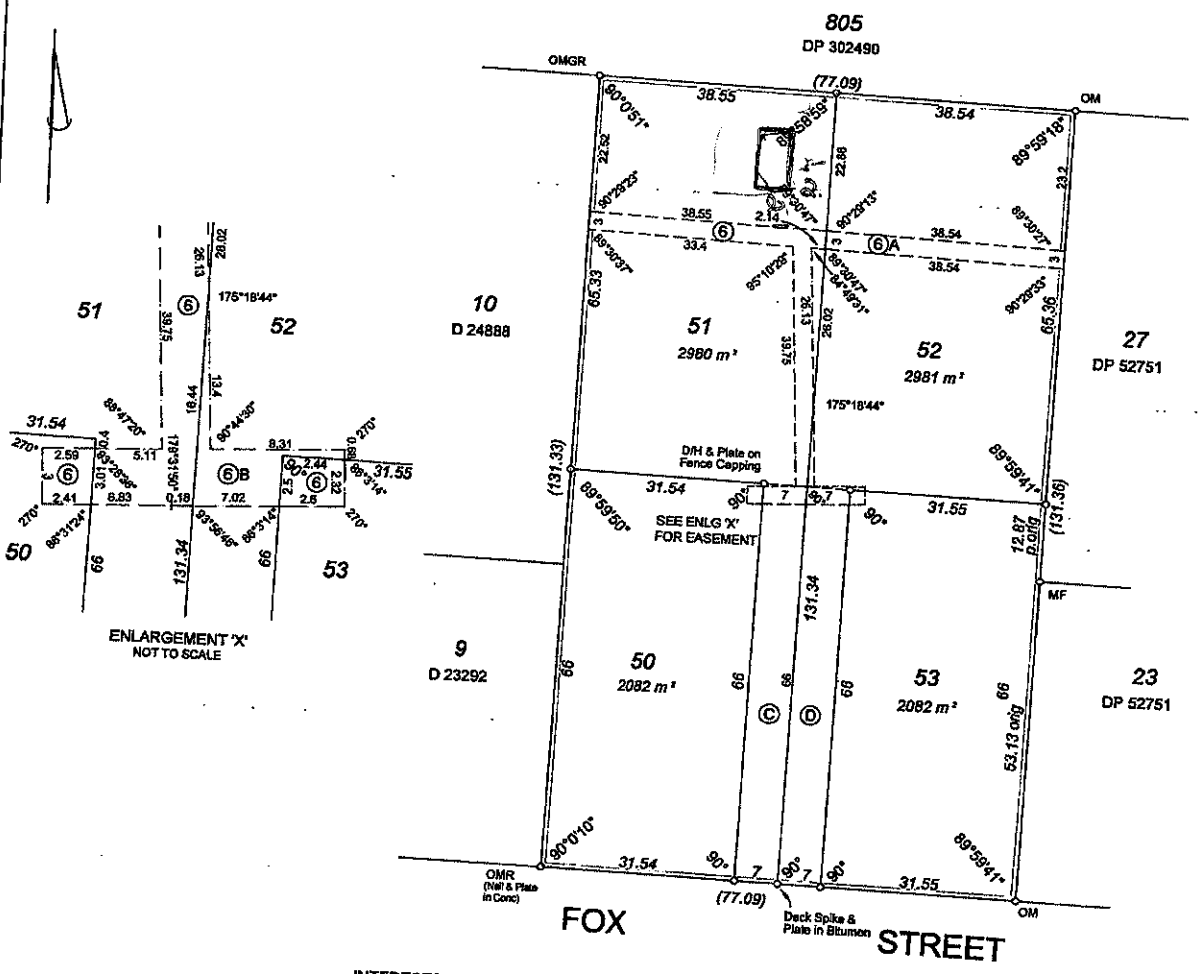

INTERESTS & NOTIFICATIONS

SUBJECT	PURPOSE	STATUTORY REFERENCE	ORIGIN	LAND BURDENED	BENEFIT TO	COMMENTS
⑥	EASEMENT (SEWERAGE)	SEC 167 OF THE P & D ACT, REG 6	THIS PLAN	LOTS 50, 51 & 53	WATER CORPORATION	
⑥A & ⑥B	EASEMENT (SEWERAGE)	SEC 167 OF THE P & D ACT, REG 6	THIS PLAN	LOT 52	WATER CORPORATION	
Ⓒ	RIGHT OF CARRIAGEWAY	SEC 136C OF THE TLA.	THIS PLAN Doc K 564976	LOT 51	LOTS 50, 52 & 53	
Ⓓ	RIGHT OF CARRIAGEWAY	SEC 136C OF THE TLA.	THIS PLAN Doc K 564976	LOT 52	LOTS 50, 51 & 53	

TYPE FREEHOLD

PURPOSE SUBDIVISION

PLAN OF

LOTS 50, 51 , 52, 53 AND EASEMENTS

DP 57934

DISTRICT WILLIAMS

TOWNSITE NARROGIN

FILE

S.S.A. NO

LOCAL AUTHORITY TOWN OF NARROGIN

LOCALITY NARROGIN

FORMER TENURE	ON	FIELD BOOK
LOT 758 ON DP 222901 C/T 2159-961	INDEX BJ31 (2) 11.37	105042

SCALE 1:750
AT A3 SIZE
ALL DISTANCES ARE IN METRES

0 10 20 30 40

P.H. & K.E. GOW
LICENSED SURVEYOR
P.O. Box 580
Narrogin W.A. 6312
Phone (08) 9881 5140
Fax (08) 9881 5575

File No 5017/07
Plan Ref 2020 Job No 20836

LODGED	TYPE OF VALIDATION
DATE 10-Dec-08	FULL AUDIT
	LEGAL COMPONENT T. Goodman
FEE PAID	PLAN/DIAGRAM 01731-2005/08
$399.00	CERTIFIED CORRECT 22-Jan-2008
ASSES No. 3244725	I.S.C.
	F.S.C.

IN ORDER FOR DEALINGS

SUBJECT TO

Sec 136C TLA

Sec 167 P&D Act

10.3.08

FOR INSPECTOR OF PLANS & SURVEYS AUTHORISED LAND OFFICER DATE

APPROVED

Approved 14.04.08

INSPECTOR OF PLANS & SURVEYS AUTHORISED LAND OFFICER DATE

SURVEYOR'S CERTIFICATE- Reg 54

I PETER GOW

hereby certify that this plan is accurate and is a correct representation of the -

(a) *survey; and/or
(b) *calculations from measurements

[*delete if inapplicable]

undertaken for the purposes of this plan and that it complies with the relevant written law(s) in relation to which is lodged.

Peter Gow 2008.01.21 10:26:05 +08'00'

Licensed Surveyor Date

APPROVED BY
WESTERN AUSTRALIAN PLANNING COMMISSION

FILE 133577

DELEGATED UNDER S.16 P & D ACT 2005

DATE 6-3-08

Landgate
Western Australian Land Information Authority

DEPOSITED PLAN
57934
ORIGINAL

SHEET 1 OF 1

VERSION 2

10.1.343 FINAL ADOPTION OF FOXES LAIR MANAGEMENT PLAN

File Reference: **21.4.1, Reserve 20605, 23152 & 39708**
Disclosure of Interest: **Nil**
Applicant: **N/A**
Previous Item Nos: **Item 10.1.233 – December 2013**
Date: **18th September 2014**
Author: **Brian Robinson, Director Technical & Environmental Services**

Attachments:

- A Schedule of submissions prepared to detail those comments received during advertising and the officers associated comments and recommendations.
- A copy of Mr Doug Sawkins recommendations in respect of the aims and objectives for the Plan; and
- A copy of the Management as revised to date will be provided to Council separately outside of the Council agenda.

Summary:

Council is requested to adopt the Foxes Lair Management Plan having regard to those submissions received during advertising of the draft plan.

Background:

Foxes Lair comprises three distinct crown reserves which are described as follows:

i. Reserve 20605 (24.602ha) being an "A" class reserve first created as a National Park on the 27th January 1931. This reserve was vested with the Town for the purposes of "Recreation" and "Parkland" in March 1979;
ii. Reserve 23152 (8.899ha) being an "A" class reserve that was vested with the Town for the purposes of "Recreation" and "Parkland" in March 1979; and
iii. Part Reserve 39708 (30.931ha), being vested with the Town for the purposes of Recreation and Parkland in December 1986.

At its ordinary meeting held in December 2013, Council was requested to consider adopting a Draft Management Plan for Foxes Lair for the purposes of advertising. The Management Plan was proposed as an update to a more basis plan adopted in 2003.

Subsequently the draft plan was advertised for a period of 60 days in accordance with Council's resolution. In response a total of 6 submissions were received. Council is now requested to consider final adoption of the Management Plan in light of the comments received.

By way of summary, the submissions:

a) Welcomed Council efforts in respect of the draft plan and a renewed focus on the reserve;
b) Highlighted a number of relatively minor errors;
c) Recommended changes to the format; and
d) Included suggestions in respect of refinement of the management recommendations and introduction of a number of additional recommendations.

A Schedule of Submissions detailing the comments received and the officers recommended response is attached. Full copies of the submissions are available to Councillors on request.

Comment:

Management Plans for Council reserves should be reviewed as a living documents, being periodically reviewed to assess performance against and review the identified aims, objectives and recommendations.

The previous Foxes Lair management plan was a relatively small document prepared in 2003. The draft Management Plan as advertised represents a substantial review of the 2003 Plan.

Several comments have been received indicating a preference for the plan contain additional details. Where possible these comments have been incorporated into the plan. However several suggests would result in substantial change to the draft document as advertised. It is recommended that consideration of these additional matters be deferred to the next review of the plan.

In reference to one particular submission, Mr Doug Sawkins has provided several detailed comments, suggesting modification of the document to include statements to justify the stated aims/objectives. In essence Mr Sawkins submits that Council should be taking the Management Plan to the next level. For example “Develop a response protocol for repairing damage to walking tracks etc”.

Whilst the majority of such comments are supported, their introduction into the current document would result in substantial change to the documentation. Given the level of matters already being addressed for the first time in the management plan, it is recommend further consideration be given to such comments as part of the next Management Plan review, which is recommended to be in 3-5 years time.

In the interim, such matters could be addressed internally through the development of standard operating procedures for works within the reserves. These procedures could then be incorporated into the next review.

Signage

One of the main issues identified by the comments received is a perceived lack of signage, being both external and internal signage.

Extremely valid points have been made regarding the lack of advance directional signage identifying foxes lair to passing traffic on Williams Road. Other valid comments were received in respect of the need for additional interpretative and regulatory signage throughout the reserve.

Recommendations 6.8.1 to 6.8.4 within the draft management plan reflect the need for review and updating of all signage. Whilst no changes are proposed to the draft recommendations, it is acknowledged that more resources will be required than original anticipated.

Additional Infrastructure

Recommendation 6.11.1 of the Draft Management as advertised was as follows:

6.11.1 Subject to budget and/or other funding being confirmed, it is recommended that Seating and Refuse Bins be acquired and installed at the Central Picnic Area and Beavers Dam

The submissions received express various views on the introduction of additional infrastructure within the reserve. In particular two of the submissions specifically oppose the introduction of bins within the reserve and recommend a 'take your rubbish home' approach for visitors to the Reserve.

Opposition to the introduction of bins is based on the potential for domestic waste to be illegally dumped at the bin sites, the potential for fauna to access the waste and spread litter.

The submissions received on one hand indicate that there is no litter problem within the reserve. On the other hand however, the submissions detail that Mr Doug Sawkins, members of the Central South Naturalist Club and other regular users of the reserve assist with the collection of litter.

Further discussion during a workshop on the Management Plan has identified that it would be more appropriate to locate bins at the entrances and exists. It is suggested however that the bins be located at the exists only. Signs may be erected within the picnic areas requesting visitors place rubbish in the bins on exiting the reserve.

Notwithstanding the above, an appropriate standard bin, with lid is required to ensure fauna are not able to access to the litter.

Vehicle Accessways/Firebreaks

Several submissions express concern over the use of a bobcat to maintain vehicle accessways and their associated drainage. It has been suggested that a grade is the appropriate machine for completing this work.

Although the Town has contracted the use of a grader and an operator on occasions to complete this work, annual maintenance has been undertaken using Council's tracked bobcat. Whilst the comments regarding use of a grader for road maintenance is supported, the use of this machine for drainage works would result in a greater area of vegetation being effected. The author of this report suggests that the tracked bobcat is the appropriate for drainage maintenance.

There are specific recommendations contained in the Management Plan relating to the particular type of machine.

Other comments received support the proposal to restrict use of firebreaks to pedestrians and fire vehicles only. Installation of collapsible bollards or fire access gates is proposed.

Pedestrian Paths and Walkways

Comments have been received expressing concern over potential vegetation disturbance associated with the upgrading of paths.

Timeframes/Key Performance Indicators

Several submissions indicate that it would be appropriate for timeframes and key performance indicators to be incorporated into the Management Plan recommendations.

Unfortunately as councillors are aware, the Town of Narrogin's ability to complete works and infrastructure acquisition is limited by Council's available resources and adopted budget. Whilst every effort will be made to implement the recommendations in a timely manner the introduction of specific timeframes is not supported. In the authors opinion, stating timeframes will most likely result in the expectations not being met at some point.

Should Council wish to consider the introduction of key performance indicators it is recommended that this be considered as part of the next review of Management Plan. Introduction of these elements at this stage of the process will involve substantial modification of the draft plan.

Feral Animals including Cats

It is correctly identified within the submissions that the Management Plan recommendations do not currently address feral animals within the reserve, particularly cats. A new recommendation 6.12.1 has been included in the proposed Plan to address this.

Responsibility for implementation

A number of the submissions have questioned who will be responsible for the implementation of the management plan. As the relevant reserve management orders place the reserves in the care and control of the Town of Narrogin, it is the Town that will be responsible for implementation of all recommendations.

Where appropriate and possible, relevant community groups and government agencies will be consulted and encouraged to participate in the proposed works.

It is proposed to modify the draft to include a simple statement prior to the recommendations to clarify this.

Periodical Review

As a living document, it is recommended that the Management Plan be reviewed in 3-5 years' time, allowing the document and its recommendations to be further refined. An additional recommendation relating to this has been incorporated into the plan as recommendation 6.13.1.

Workshop

As councillors may be aware, those persons who lodged submissions were invited to attend a workshop. The workshop was attended by 4 persons who lodged submission

along with Mr Peter White. Many issues were discussed which will refine the way officers approach works within the reserve.

As an exercise, attendees were asked to use 10 $1.00 Foxes Lair notes to identify the priorities as they saw them moving forward. The priorities identified were:

- Rehabilitation Works – 14
- Physical Infrastructure – 13
- Signage – 5
- Weed Control – 5; and
- Education and Promotion – 4

It is proposed that the ranking of these priorities will be used by Council staff for expenditure allocation within the 2014/15 financial year.

Working Group/Consultative Committee

Several suggestions have been made for the formation of a working group and/or consultative committee. Whilst the merit of this approach is acknowledged, it is the author's opinion that the formation of such a group is unwarranted at this time given that sufficient work exists in respect of the Town addressing these fundamental management issues that have been identified.

Consultation:

The proposed Management Plan was advertised for a period of 60 days in accordance with Council's resolution. A workshop was also held, with invitations issued to all persons who lodged submissions during the advertising period.

Consultation with the Chief Executive Officer, Town Foreman and Ranger has also been undertaken.

Statutory Environment:

Local Government Act and Land Administration Act.

Policy Implications: - Nil

Financial Implications:

In adopting the 2014/15 annual budget, Council has made specifically allocations for staff time and capital works to be undertaken within Foxes Lair.

The costs associated with works to be undertaken in accordance with the Management Plan recommendations will be wholly contained within the adopted budget. Any works or infrastructure cannot be contained within the adopted budget will be deferred for consideration as part of the next available budget process.

Strategic Implications:

Once adopted the proposed Management Plan will be used to guide works to be undertaken within the reserves. The plan will also be used to form future budget considerations and applications for grant funds.

Voting Requirements:

Simple Majority

Council Resolution: 0914.131

Moved Cr Russell **Seconded Cr McKenzie**

That Council:

1. Adopt the Draft Foxes Lair Management Plan subject to those modifications reflected within the Schedule of Submissions.

2. Request that copies of the Final Management Plan be made available through the Town of Narrogin website and Library; and

3. Notify those persons who lodged submissions accordingly.

CARRIED 6/0

Author	Submission	Officer Comment	Recommendation
Brian Seale **Narrogin Motel**	1. Generally a well written clearly presented plan. 2. Comments listed at 4.1 relative to disabled access was not reflected by a specific recommendation. 3. Comments at clause 4.2 (internal roads) and 4.3 (Parking) are not captured by a recommendation. 4. The comments on pathways in section 6 should also be formalised with a specific recommendation. 5. Without justification I do not support the merger of the reserves. 6. Recommendations on Fire Management are supported, though the removal of timber from a reserve is not permitted and the proposed 50m buffer may contain populations of rare flora and fauna. 7. Recommend editing of point 6.2.2 to reflect maintenance either annual or an as required basis, but not both. 8. Clause 6.3.1 should be amended to refer to the Department of Parks and Wildlife. Otherwise the recommendations are supported. **9.** Part 6.4 should be corrected to refer to the "Control of Vehicles (off road) Act 1978. Question ability for police to administer the Act and recommend the ranger conduct periodical patrols of the area.	Noted. The authors comments are correct, a recommendation has been omitted. The authors comments are correct and supported. The recommendations contained in 6.6. did not specifically address erosion. Personal Opinion. There is no specific intent to remove timber from the reserve. Fuel reduction will generally be limited to 50m buffer and will be undertaken in consultation with relevant parties. The wording of this clause could be refined. Comment supported. The correct department name should be stated. Ppatrols are being undertaken within the reserve. In accordance with section 38 of the Control of Vehicles (Off-road Areas) Act 1978, police are authorised officers.	That the comment be noted. Recommendation 6.6.1 and 6.6.2 amended accordingly. Additional recommendations have been included in Recommendations 6.5.4 and 6.5.5. Recommendation 6.6.1 be modified accordingly. That the comment be Noted. That the comment be noted and the author advised accordingly. The wording be modified to reflect "as required on an annual basis". The clause be modified to reflect the correct department name. The author be advised accordingly.
Patricia Rose Unit 48/57 Forrest Street NARROGIN WA 6312	1. It is reassuring Council intends to maintain Foxes Lair as a valuable asset. 2. Dryandra Visitors Centre have received positive remarks about the Caravan Park since recent changes and the enjoyment and surprise with Bush Walks and Bird Watching being so close. 3. I trust consideration will be given to the following:	Noted. Noted.	That the comment be Noted. That the comment be Noted.

	a. A better designed information bay on Williams Road providing shelter, a drinking water feature and maps of Town and Foxes Lair b. Department of Parks and Wildlife and DER should be consulted regarding the placing of waste bins in nature reserves. There is encouragement now to observe-conserve. Leave only Footprints. Waste bins at car park sites facility for easy clearing. c. Regular consultation with Narrogin Council and maintenance is required, especially when there is damage to walk tracks. d. Large mounds of earth and debris from felled York Gum Trees following the Range Road drainage works are of concern, providing habitats for rabbits and household rubbish. 4. I look forward to the implementation of good maintenance and management of Foxes Lair. 5. Groups involved in Foxes Lair Rehabilitation: • Central South Naturalists Club; • Friend of Foxes Lair; • Blackwood Basin Group • Roadcare; • Jobskills and Community Facilities Grants; • Narrogin Town and Shire Councils • Department of Parks and Wildlife	Refer to comment section of report. Various views exist on this opinion. Refer to comment section of report. Refer to comment section of report. Council officers have been instructed to arrange the removal of this material. Noted. It is noted that various groups have been involved in the management of foxes lair. Continued involvement of these groups is highly recommended.	The comment be noted and that subject to appropriate funding becoming available consideration be given to this. The comment be noted and the author be advised accordingly. The comment be supported and the author advised accordingly. The author be advised accordingly. That the comment be noted. The draft management plan has been modified to reflect a wider range of community groups, government agencies and others as appropriate. The author be advised accordingly.
Central South Naturalist Club	1. The preparation of a plan and commitments to preserve this area is positive and welcomed. 2. The Central South Naturalise Club has taken a keen interest in the consideration of foxes lair and has regularly assist in removing weeds and litter. 3. The Friend of foxes lair was a group of concerned locals who volunteered to establish walk trails etc with the guidance of Mr Doug Sawkins.	Noted. Noted. The involvement of the Central South Naturalist Club is acknowledged in the draft management plan. The role of Friends of Foxes Lair is acknowledged in the draft plan.	That the comment be noted. That the comment be noted. That the comment be noted.

	4. Mr Sawkins was commended for his commitment in 2008 by the Conservation Council of WA for his dedication promoting environmental awareness and protection of WA Natural Heritage.	Noted.	That the comment be noted.
	5. Despite his ongoing commitment, his efforts have not been so highly regarded by the local council land he has felt he should step back from active participation.	The author of this report can only speak for current Management who highly regard Mr Sawkins efforts, knowledge & continued involvement.	The comment be noted and the author be advised accordingly.
	6. The group lead by Mr Sawkins "Friends of Foxes Lair" have not been active for a few years.	Noted. Mr Sawkins is however active on behalf of the group.	That the comment be noted.
	7. We feel formation of an advisory body is imperative with special expertise to guide the direction of the Reserve Management.	Refer to comment section of report.	That the comment be noted, but not supported.
	8. Clear funding arrangements under the Council's annual budget is required so that strategic expenditure can be carefully planned, including consultation with suitably qualified experts.	Council's 2014/15 budget contains clear funding for Foxes Lair management and improvement.	The comment be noted and that Council consider a specific budget allocations for foxes lair as part of future budgets.
	9. The CSNC has considered the proposed Management plan in detail and offers the following comments and amendments:		
	i. Overall the draft is a set of desirable outcomes or an MOU more than a Plan with no specific or measurable actions to realise the objectives. Clear priorities, timelines and key performance indicators are required.	Refer to comment section of report.	The comment be noted.
	ii. We would like to see a vision statement as "the protection and enhancement of the conservation values of the Reserve, followed by the other aims.	No objection is raised to the introduction of a Vision Statement. A Draft statement has been prepared for Council consideration.	That a Vision Statement be incorporated into the proposed Management Plan.
	iii. We would prefer to see the opening sentence in the Objectives section.	Refer to comment section of report.	That the first sentence in the objectives section be modified to remove specific reference to Friends of Foxes Lair.
	iv. Objective d) on page 5 to include the words and "*take action to prevent future erosion."*	The modification of objective (d) as suggested is supported.	Objective (d) be reworded to include the words "and take action to prevent future erosion".

	v.	The name Central South Naturalist Club requires correction in the last paragraph of section 2.3.	Correction of the name is supported as suggested.	The comment be supported and the paragraph be modified accordingly.
	vi.	Section 4.1.2 needs amendment to reflect the existing carpark for granite walk.	Comment is supported.	The comment be supported and the paragraph be modified accordingly.
	vii.	Furnival Street is incorrectly labled Falcon Street in Figure 4. The walk trails also need amendment for accuracy.	Plans within the document have been modified to reflect the correct road name.	The submission be supported and the author be advised accordingly.
	viii.	We proposed that that the western firebreak be closed north of Beavers Dam and traffic be directed towards Granite Walk.	Refer to comment section of report.	The submission be supported and the author be advised accordingly.
	ix.	Larger signage may dissuade inappropriate road usage, but higher usage of the reserve will result in vehicles being report.	Aims detailed in the plan include encouraging community involvement and sustainable recreational activities.	The comment be noted.
	x.	Clearer signs at all entrances along with indications as to distances. Signs also required to make it clear no parking available for caravans park inside the reserve.	Refer comment section of report.	The comment be noted.
	xi.	A bobcat is not an appropriate machine to use in managing vehicle access ways. A road grader should be the main formation machine. Using a track configuration bobcat rather than rubber tyred bobcat would result in minimum impact.	Refer to comment section of report. Council's bobcat is a tracked machine.	The comments be noted and the author be advised accordingly.
	xii.	Interpretative and direction signage near the entrances are poor. Parking for caravans should be provided nearby and signposted. Source grant funding for walk trail signage.	Council's adopted 2014/15 makes clear allocation of funds for expenditure within Foxes Lair. Refer to comment section.	The applicant be advised that Council has made a clear allocation of funding for Foxes Lair improvements as part of the 2014/15 budget, including signage.
	xiii.	Several seats have been well positons and should be maintained along with the existing picnic tables. Due to vandalism several seats have been damaged or destroyed. New furniture should be indestructible and robust.	Comments offered are supported.	The submission be supported and the author be advised accordingly.
	xiv.	Upgrades to pathways must be managed to prevent erosion. Given the natural	Refer to comment section of report.	The comments be noted and the author be advised accordingly.

		environment, most walkers are aware of the potential for uneven surfaces and take care.		
	xv.	We agree firebreak access must be restricted to emergency vehicles.	Noted.	That the comment be noted.
	xvi.	An annual review or fire management is good but by whom. We suggest in consultation with all stakeholders including FESA, DPAW, DAFWA, Water Corporation, WA Tourim/Golden Outback and adjoining residents.	It is intended to liaise with the relevant agencies of FESA and DPAW, but not DFAWA or other suggested stakeholders.	The author be advised that the Town intends to liaise with FESA and DPAW given their expertise in Fire Management and native flora fauna, but not the other parties suggested.
	xvii.	Retaining access to beavers dam is important. There are also three gates to the Water Reserve along that fence line.	Retention of access to beavers dam is supported by the draft.	The comment be noted.
	xviii.	Seasonal inspections, particular after major weather are preferable to an annual routine. Encouraging reserve users to raise issues asap which will ease the burden on Council staff.	Notwithstanding other inspections may be required, annual inspection is highly recommended to assist in determining budget allocations.	The comment be noted and the author be advised accordingly.
	xix.	Recommend an audit to identify the extent of introduced/invasive species of flora & fauna.	An audit is already recommended at recommendation 6.3.1.	The comment be noted.
	xx.	Weed spraying and removal needs a clear funding arrangement.	Council has made a clear allocation for weed control in 2014/15 budget.	The comment be noted and the author advised accordingly.
	xxi.	As in standard in National Parks, we recommend that no bins be provided within the reserve and users be requested to take their litter home. Apart from logistics of entering the bins, birds and animals scaterring rubbish or being injured by it.	Refer to comment section of report.	Modification of recommendation 6.7.1 is recommended to refer to the installation of appropriate bins at the Wiliams Road and Range Road exists. Recommendations in respect of furniture now contained in 6.11.1.
	xxii.	An annual audit of signage is not necessary.	An annual audit is required to assist Council in determining the annual budget.	That the comment not be supported and the author be advised accordingly.
	xxiii.	Specifiy motorbikes are prohibited as well as off road vehicles in recommendation 6.8.4.	No objection is raised to the adding of the words “including Motorcyles”	Recommendation 6.8.4 be modified to include the words “including motorbikes”.
	xxiv.	Identify location of existing public toilets for the convenience of visitors in a new recommendation 6.8.5.	Suggestion is supported.	Introduce 6.8.5 to ensure a Town Map showing toilet locations is included on new interpretative signage to be erected.

	xxv. Consider using Bushcare for promotion. A spring field day could introduce the concept to interested community members.	The use of bushcare is supported as one option for promotion.	Recommendation 6.10.1 be modified to reflect the website www.bushcare.org.au being used in promoting the reserve.
	xxvi. We do not support the introduction of bins or toilets.	Refer to comment section of report.	The comment be noted.
	xxvii. There are concerns over water diversion within Foxes Lair. Will the current plan to divert water to the railway dam have any effect on the vegetation in the reserve?	Only potential water diversion is being considered adjacent to Narrakine Road, which will not impact on the water available to vegetation.	The comment be noted and author advised accordingly.
	xxviii. Will the arboretum be maintained as it is not mentioned.	Arboretum is mentioned several times and will be maintained.	The author be advised accordingly. Mapping is to be updated to reflect its location.
	xxix. Are there any plans for Beavers Dam?	No specific plans at this stage.	The author be advised accordingly.
	xxx. Can there be increased publicity providing the Rangers phone number for reporting inappropriate activities.	Reporting details are proposed to be incorporated in the interpretative signage.	The author be advised accordingly.
	xxxi. We have made constructive comments relating to the draft and would be happy to discuss or clarify any issues.	Comment is noted.	The comment be noted.
	xxxii. Thank you for the opportunity to be involved in this project.	Comment is noted.	The comment be noted.
Pat & Jim Curnow 42 Narrakine Road NARROGIN WA 6312	1. Foxes Lair is one of Narrogins greatest assets that needs very careful care and maintenance to maintain and enhance its natural attraction.	Comment is noted and supported.	The comment be noted.
	2. We are pleased Council has produced this Management Plan and has invited public comment.	Comment is noted.	The comment be noted.
	3. Our comments are as follows:		
	a. There are many ideas for action in the plan, but little mention of timeframes or ongoing funding. Money needs to be set aside on an annual basis, otherwise needed work will be put aside pending funding.	Refer to comment section of report.	The comment be noted and the author advised accordingly.
	b. An advisory committee including should be formed with some of the many experience and able people in the district to guide maintenance.	Refer to comment section of report.	The comment be noted and the author advised accordingly.

	c. Consideration should be given to eco-tourism which will continue to grow as our country is urbanised; d. Signs need to be improved, particularly near the caravan park at the Williams Road entrance, including information on walk trails, distances and natural attractions. e. There needs to be a plan in place to encourage the local community to use and 'own' foxes lair. Increase use will result in users observing what repairs are needed and a method of reporting these problems should be well publicised. Thankyou for the opportunity to comment.	The need to support eco-tourism is supported and was reflect in the aims stated in the draft. Comment is supported. Refer to comment section of report. Comment is supported and was reflected in the aims, objectives and recommendations of the draft. Publication of the Rangers Phone number to be incorporated into new interpretative signage.	The comment be noted and the author advised accordingly. The comment be noted and the author advised accordingly. The comment be noted and the author advised accordingly.
Doug Sawkins	1. I congratulate Council for the initiative. 2. The attached document contains suggested objectives and actions to supplement the draft. 3. There is a great opportunity to implement this plan, viewing it within a wider tourism strategy for the south-west edge of town.	Comment is noted. Refer to comment section of report. Comment is supported.	The comment be noted. The comment be noted and the author advised accordingly. Further consideration be given to a wider tourism strategy for Narrogin following completion of the Foxes Lair Management Plan.
Patricia Wardell-Johnson PO Box 310 NARROGIN WA 6312	1. As a ratepayer I was pleased to see the 2014 Foxes Lair Management Plan 2. Having resided in Narrogin for 30 years, this reserve has given my family and I many years of bush enjoyment from picnics in earlier years, the children bike riding, playing mud at beavers dam, scout outings, swinging on the gully rope. 3. Through people like Doug Sawkins and Peter White and their presentations, handouts etc to the Central South Naturalist Club our appreciation of these reserves has been enhanced.	Comment is noted. Comments are noted. Comments noted.	The comment be noted. The comments be noted. The comments be noted.

	4. Attachments 1,2,3 and 4 were missing.	Noted. Incomplete copy of report inadvertently provided.	The comments be noted and the author advised accordingly.
	5. The Friends of Foxes Lair does not exist and has not met for many years. With this in mind who will do what is stated in relation to this non-existent group.	Mr Doug Sawkins still proports to represent Friends of Foxes Lair and is actively participating in the management and promotion of the reserve.	The comments be noted and the author advised accordingly.
	6. Aims – Vision may be a better word.		
	7. How are you going to encourage community involvement?	Comment noted, but not supported. Refer to comment section of report.	The comments be noted. The comments be noted and the author advised accordingly.
	8. Objectives is titled 1.1 when it should have been 1.2.	Author is correct. Reference has been corrected.	The comment be supported.
	9. A sole Ratepayer Doug Sawkins has been the unofficial carer for over 20 years visiting most weeks and completing many hours of volunteer work.	Comment is noted.	The comment be noted.
	10. Weeds – do you mean declared weeds which are taking over in many areas plus freessias, bone seed and veldt grasses.	The draft plan refers to all introduced/invasive species.	The author be advised accordingly.
	11. History – where are you going to give the history of Foxes Lair for others to read. There is an article on the history written by Maurice White. It needs to be accurate and correlated and made available.	Reference to Mr Maurie Whites written history of Foxes Lair should be incorporated by reference. Copies of Foxes Lair documentation can be made available on website and in library.	Reference to Mr Maurie Whites written history of Foxes Lair be made at the end of section 2.3. Copies of the Plan be made available on website and in library once finalised. The author be advised accordingly.
	12. Figure 1 does not demonstrate the existing tracks.	Draft plan requires refinement.	The existing track plan be modified accordingly.
	13. I do not agree with the statement the entrance is well signposted. Large advances signs are needed as seen in Williams.	Refer to comment section of report.	The comments be supported.
	14. To encourage visitors to stop and explore, the current information bay needs an upgrade. It is too small for the large 4wd towing 20-24 vans. The bay is directly opposite foxes lair and should be part of the improvement plan and with an upgrade of the information board to attract more visitors to explore the reserve.	Refer to comment section. Separate but related project to be undertaken.	Further consideration regarding an upgrade of the information be undertaken once suitable funding is identified.

	15. The walk trail map is not correct and is incorrectly referenced.	A corrected map has been supplied by Mr Doug Sawkins.	The walk trail map be amended accordingly.
	16. Agree more disability access is required at the main picnic site (4.1.3). Boulders used to control trail bike access currently prevent wheelchair/ pram access to information board & picnic tables.	Comments are noted and supported y draft plan recommendations.	The comments be noted.
	17. The wheelchair access at granite walk needs maintenance - difficult for a pram or wheelchair.	Comments are noted and supported by draft plan recommendations.	The comments be noted.
	18. New fire trails need signs to show fire access only as they connect with walk trails which is only encouraging illegal bike and car access.	Comments are noted and supported by draft plan recommendations.	The comments be noted.
	19. Signs are inadequate and do not lead motorists to stop and explore the area.	Refer to comment section of report. Comments supported.	The comments be supported and applicant advised accordingly.
	20. Current sign on cnr of Williams and Narrakine is obstructed by a branch.	Noted. Maintenance to be arranged.	Appropriate maintenance be completed to remove the branch.
	21. Information at main picnic area and granite walk is very good but needs updating and regular checks for damage.	Rangers regularly patrolling reserve to identify inappropriate activity including vandalism.	The comments be noted.
	22. Positive signs (ie what to enjoy) should always be larger than rules.	Personal opinion is noted.	The comments be noted.
	23. Signage is needed at all access points and information on who to report illegal activity would be useful.	Refer to comment section of report.	The comment be supported and the author be advised accordingly.
	24. Perhaps the Foxy Press publication could be displayed at larger interpretative signs and changed with the months.	Interpretative Signage may be designed to refer to Foxy Press and where it is available.	The comment be supported and the author be advised accordingly.
	25. Park Furniture sites are very limited and the report not mention the seats placed at strategic placed along the walk trails.	Comment supported.	Section 4.5 be amended to reflect walk trail seating.
	26. Shelters (none currently) are needed for protection from weather and due to isolation the use of very sturdy unbreakable.	Comment supported.	Recommendation 6.11.2 be modified to include reference to shelters being installed.
	27. Pathways need to differentiate between pathways and trails.	Comment supported. Signage should appropriately identify standard.	Comments be taken into account when designing signage for walkways and trails.
	28. Will native titles have any impact on the plans to rationalise the reserve?	It is understood native title will not impact on a reserve amalgamation.	The author be advised accordingly.

	29. The plan detailing the current firebreaks is not correctly referenced.	Comment supported. Corrected plan required.	The current firebreaks plan be amended accordingly.
	30. Is there a controlled burn planned at any stage? Previous fires have been lit by arsonists.	The need for a burn is to be assessed as part of annual inspection.	The author be advised accordingly.
	31. All three drainage recommendations need to be more specific stating by who and when.	Works to form part of Town of Narrogin annual maintenance program	Introduction section be mofified to reflect Town of Narrogin responsible for all works.
	32. Disturbance of the area should be minimised to conserve plant life.	Comment noted.	Comment be noted.
	33. In respect of recommendation 6.3.1, Friends of Foxes Lair do not exist so which other interest group will be formed? The Central South Naturalist Club has taken an interest in the area and assists Doug with maintenance, clean up and weed control.	Refer to comment on submission point No 5 above. As recommended other community groups are to be encouraged to participate in management and use of the reserve.	The comments be noted.
	34. There is no mention of vermin or feral cat control.	Refer to comment section.	Reference to cat control be included.
	35. In respect of walk trail maintenance, Doug Sawkins would be the main person being the unofficial caretaker of the area. He will not be here forever so which group will take up this role?	As a Crown Reserve vested in the Town of Narrogin, it is the Town's responsibility and not Mr Sawkins.	The author be advised accordingly.
	36. who is going to address the erosion, annual maintenance etc and will this be done in conjunction with others with expertise in this area (ie DPAW);	As a Crown Reserve vested in the Town of Narrogin, it is the Town's responsibility and not Mr Sawkins.	The author be advised accordingly,
	37. A specific budget needs to be stated and grants applied for to ensure various projects are funded.	Council's 2014/15 budget contains specific allocations for Foxes Lair.	The author be advised accordingly.
	38. I do not agree with placing rubbish bins in area as this encourages more littering with household waste and fauna causing litter to be thrown around. Many bush sites ask visitors to take their own rubbish.	Personal opinion noted. Refer to comment section of report.	The comment be noted.
	39. As stated signage is needed at entrance and picnic area.	Refer to comment section of report.	The comment be supported.
	40. The CSNC has taken part in the keep Australia beautiful campaign adopting the road side areas of Williams Road and Narrakine Road.	Comment noted.	The comment be noted.

	41. In respect of recommendation 6.8, signage is inadequate from a motorist and visitor aspect and does not encourage exploration of the area.	Comment essentially repeats previous statements. Refer to comment section of report.	The comment be noted.
	42. The entry to the Town Water Supply tank should be signposted as restricted access to avoid confusion.	Water Corporation responsibility.	Council officers liaise with the Water Corporation over this matter. The author be advised accordingly.
	43. Road access along the Water Corporation fence should be left in place and promoted as dual use (walk/drive) with applicable speed restrictions and signage to give more access to a slow drive through to continue past Beavers Dam and onto the Arboreteum.	It was always intended for the access to be maintained along the western boundary south of Beavers Dam.	Recommendation 6.1.5 be modified accordingly.
	44. I feel so much more could be done in the area of promotion and education but a combined effort is needed by many parties (including local schools) to make it work.	Comments are supported by draft plan recommendations.	The comments be noted.
	45. I would encourage all Councillors to look at the website www.bushcare which promoted volunteering in our area and includes promotional material to save re-inventing the wheel.	Bushcare website is supported as one option for promotion.	Recommendation 6.10.1 be modified to reflect the website www.bushcare.org.au being used in promoting the reserve.
	46. In respect of recommendation 6.11:		
	i. As stated I do not agree with rubbish bins.	Personal Opinion, noted.	The comment be noted, but not supported.
	ii. shelters over picnic tables are needed with more picnic tables.	Comments noted, supported and to be reflected within the plan.	Recommendation 6.11.2 be modified to reflect the need for shelters to be installed.
	iii. The lack of public toilets in the area is an issue. Would consideration be given to the Caravan Park Toilets or construction of toilets at the information bay?	An additional toilet block at the information bay is not supported at this stage. Recommend signage directing public to current facilities.	The author be advised accordingly.
	iv. What are the plans for beavers dam. I note that you have removed the large logs that were put in place to prevent the four wheel drives, so once the area is wet again it will be used inappropriately. No signs in this area to prevent the activity.	There are no specific plans for Beavers Dam at this stage, other than to develop it as an alternative to the central picnic area.	The author be advised accordingly.

	47. The plans does mention the arboretum, which needs more promotion (ie a guide to the tree species available. 48. Are there any plans to allow Mountain bikes (not motorbikes)? If not in these reserves then where can youth ride through bush areas? Perhaps the area known as the commonage could be left for that activity. 49. Thankyou for the opportunity to comment on this very special area.	he arboretum is mentioned and is to be retained. It is not proposed to cater for Mountain Bikes within foxes lair except on established trails. Off trail use is not consistent with reserve purpose and is contributing to erosion. Comment is noted.	A new recommendation 6.11.4 reflecting the need for a plan to be developed as soon as possible. The author be advised accordingly. The comment be noted.

Suggestions for inclusion in the Foxes lair Management Plan

I congratulate Council, and in particular Brian Robinson for the management plan initiative.

This document contains suggested objectives and actions to supplement council's draft management plan. There is a great opportunity to implement this plan and view it within a wider tourism/ community amenity strategy for the south-west/southern edge of the town.

Appendices 1 and 2 contains a maps of suggested initiatives for consideration.

Doug Sawkins

41 Falcon St Narrogin

April21 2014

The Town of Narrogin has identified the following aims for management of Foxes Lair:

1. To protect and conserve the native vegetation, flora, fauna and habitats located within the reserve;
2. To minimise the impact of fire, floods, and erosion from the reserve on the town , reserve infrastructure and the environment.
3. To facilitate sustainable use of the reserve for passive recreation, education and eco-tourism.
4. To encourage community involvement in management of the Reserve.
5. To raise community awareness of nature conservation and the importance of protecting remnant vegetation, and
6. Ensure continuing Water Corporation approval to have their parcels of land in the reserve area managed as a part of the Foxes Lair reserve.

1. **Protect and conserve the native vegetation, flora, fauna and habitats located within the reserve;**

Foxes lair has over 300 wildflower species that are located in a range of vegetation communities. There are 2 priority 1 endangered species and several are restricted in occurrence and threatened.

Threats include

- Weed encroachment
- Habitat threats such as erosion, sedimentation, water deprivation due to natural runoff being diverted by roads, illegal rubbish dumping and firewood collection, and periodic incursion by mountain bikes, trail bikes and 4-WD vehicles. 4-WD vehicle driving through Beavers dam in winter pose a critical risk of introducing dieback disease into Foxes Lair.
- Kangaroo hunting.
- Lack of a fire management plan for optimum vegetation/ native animal survival and diversity.

Objectives

- Produce a map of vegetation types and priority species in Foxes Lair.
- Identify threats to these priority habitats and species and prepare management plans. Note top priority areas are duplex winter wet soils adjacent to Beavers dam, the red leschenaultia further south adjoining Bottle Creek reserve, Star white spider orchid, Sphere banksia, Bull Banksia, Jarrah areas.
- Develop a response protocol for repairing damage to walking tracks, and the ecosystem/ vegetation from human intervention or storm damage that includes the role and responsibilities of volunteers.
- Introduce a burning regime including mosaic burning at intervals for optimal environmental management that is consistent with safety objectives in the reserve fire management plan.
- Ensure that water control measures minimise water and soil loss from vegetation areas due to water runoff and diversion by tracks.
- Produce weed maps and protocols to manage the problem
- Identify degraded areas, such as closed or illegal tracks, and old pits and dumps and develop restoration protocols.
- Ensure that tree loppings/prunings be retained within the park, ideally to assist in the regeneration of degraded areas.
- Ensure that road making or other material brought into the park is free of weeds and disease.

2. **Minimise the impact of fire, floods and erosion from the reserve on the town**

Runoff from Foxes lair an exceptional rain event in 2011 exacerbated flooding in the town site. Renovation of a diversion bank has removed the threat associated with the drainage line entering the town site near Range Road, but runoff and erosion is a problem on many fire access track, and existing and closed walking tracks. This erosion could be stopped by adopting a planned approach to track construction and maintenance. Volunteers in Foxes lair have extensive knowledge of the problems that should be utilised.

Although most vegetation communities in Foxes Lair do not create a high fuel load, its proximity to the town site requires a higher level of fire management than other reserves. The existing fire access tracks are adequate for most areas, but additional requirement have been identified adjacent to Felspar St and Narrakine Rd.

Objectives

- Produce a map of erosion and runoff problems, develop site specific solutions, and prioritise them.
- Develop work protocols for council works teams to ensure that routine maintenance and repair work maximises work and environmental objectives.
- Revise and finalise the fire access track plan.
- Develop a fire management plan that includes fuel load management, fire team and community safety, and is compatible with environmental and community requirements.

3. **To facilitate sustainable use of the reserve for passive recreation, education, and ecotourism**

Foxes Lair has a wide variety of wildflowers and ecosystems that are largely in good condition, and walking, information, and picnic facilities that have been increasingly used since the Friends of Foxes Lair created and implemented a track management plan and maintained stewardship of the reserve. Some facilities have declined in recent years. There is great potential to improve the tourist use of this reserve as a part of an overall plan that includes the Common and Railway Dam.

Threats include

- Ongoing incursion by off-road and speeding vehicle that degrade the bush, and tracks and are a risk to passive users.
- Locals creating illegal tracks (largely for mountain bikes and motor bikes) .
- Low environmental skills, task identification and communication problems, and competing priorities within the Narrogin Town Council.
- Occasional vandalism of facilities.

Objectives

- Create an overall plan for maximising tourism in Foxes lair that caters for drivers, walkers, picnickers, cyclists, educational users, and the disabled. The plan should be compatible with other objectives and link to tourism opportunities in the Common and Railway Dam. Walking paths descriptions need to show degree of difficulty.
- Prioritise elements of the plan for funding purposes, and maximal usage of volunteer resources.
- Develop a maintenance plan and the ability to quickly respond to problems.
- Develop a plan for ongoing maintenance and improvement of the Narrogin Arboretum.
- Create a web link for attract visitors and maximise their experience in Foxes Lair. The Friends of Foxes Lair have been working on this.
- Place Foxes Lair photographic tags on Google Earth.
- Advertise Foxes lair facilities within the town and tourist bays.
- Continue support for tourist facilities such as Dryandra Visitor Centre.

4. Encourage community involvement in management of the reserve.

Volunteers have been critical for the resurrection of Foxes lair from a degraded bush area and providing stewardship of the reserve.

Objectives

- Create a protocol that allows volunteers to work in Foxes Lair assist with the implementation of this plan, and meets Council's safety and other requirements.
- Provide official opportunities for advocacy of the reserve.

5. To raise community awareness of nature conservation and the importance of protecting remnant vegetation

Awareness of Foxes Lair in its current state is low, with many residents either having never visited the reserve or recalling it from intermittent visits in former day when it was degraded and considered by many to be an unsafe area. This has particularly limited its use by the elderly and disabled, who have largely avoided available facilities.

Objectives

6. Ensure continuing Water Corporation approval to have their parcels of land in the reserve area managed as a part of the Foxes Lair reserve.

Water Corporation land parcels exist with land vested in the Narrogin Town Council, and are part of the overall Foxes lair reserve, walking tracks and other facilities. When the Friends of Foxes lair developed their plan, the then head of the local office was agreeable but asked to be consulted regarding any new initiatives. This plan will entail changes to their land that may affect their operations, and needs their approval to be viable.

Appendix 1: Foxes Lair as a part of an overall tourism experience in a bushland setting

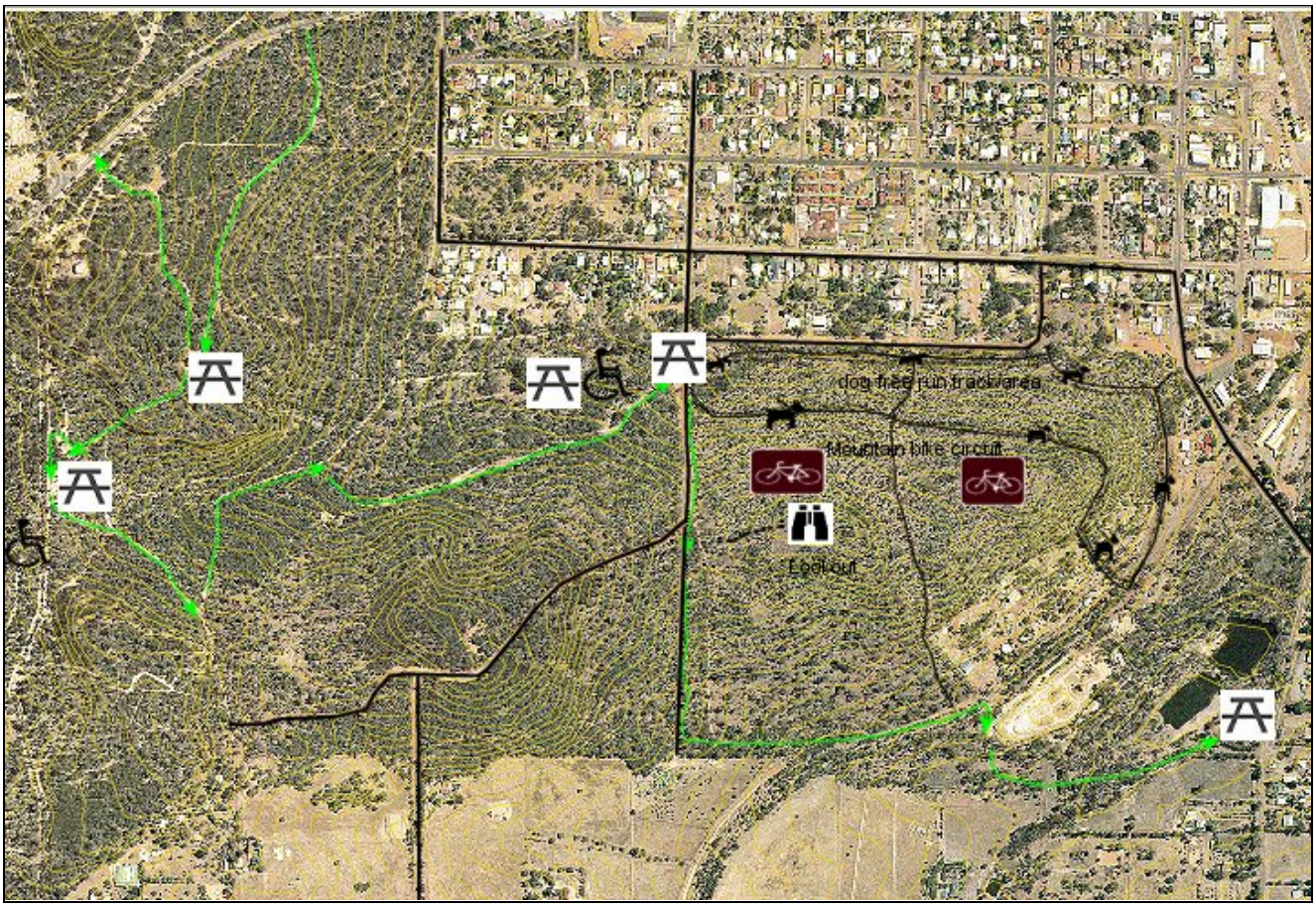

Appendix 2: suggested walks, parking areas access road and firebreaks in Foxes lair

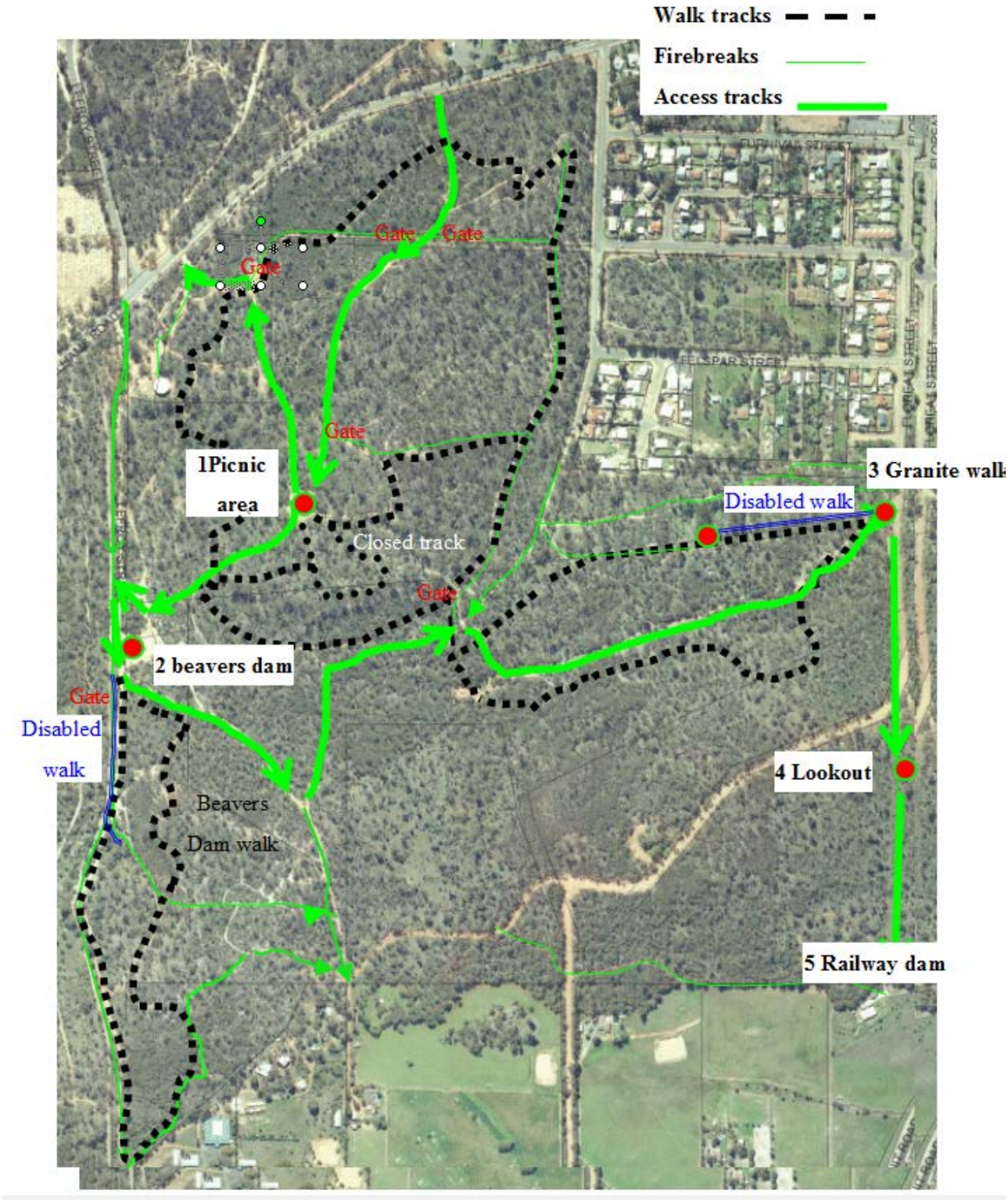

10.2 CORPORATE AND COMMUNITY SERVICES

Please note: Cr McKenzie departed the meeting at 7:43pm due to financial interest in the following item.

10.2.344 UPPER GREAT SOUTHERN HOCKEY ASSOCIATION DEPARTMENT OF SPORT AND RECREATION SUBMISSION FOR FUNDING.

File Reference: **26.8.21**
Disclosure of Interest: **Nil**
Applicant: **Upper Great Southern Hockey Association**
Previous Item Nos: **Nil**
Date: **16th September 2014**
Author: **Mr Aaron Cook – Chief Executive Officer**

Attachments:

The Upper Great Southern Hockey Association Department of Sport and Recreation Community Sport and Recreation Facilities Fund "CSRFF" grant application.

Summary:

It is presented for Council to consider formally supporting the Upper Great Southern Hockey Association (UGSHA) CSRFF Grant Application and rank it in priority of applications received then submit Councils resolution and application to the Narrogin Office of the Department of Sport and Recreation.

Background:

Each year the Department of Sport and Recreation "DSR" open the CSRFF grant round that is split into two categories. The larger grant is from $166,667 up to $3 Million requiring far greater information provision and the lesser grant being from $50,000 up to $166,667 which the UGSHA is applying for.

The UGSHA have been consulting with the Town for several years in regards to this upgrade project and have presented the author with a very professional application that can be presented to the Department upon Council forming this resolution.

The Synthetic surface that is currently in place has stood the test of time well for the UGSHA with longer than expected life having been achieved from the playing surface. This project will upgrade the playing surface to a higher level allowing the Association to facilitate higher level exhibition and State level games.

Comment:

It is required of the Town to rank the projects received for the for the CSRFF round so that DSR understand the Council's priority of projects. However, in this instance only one application has been received and, as such, it will be ranked as the number one project.

Please note that this is no indictment as to the quality of the application as it would be one of the most professional applications that the author has seen during his career.

The normal, although not committed to being so, process for funding for the CSRFF grants are that the applicant, Council and DSR share the project cost in thirds. The Council and the applicant quite often have sections of in-kind works that form part of their share. In this instance the UGSHA are not requesting Council's 1/3rd as this was the original agreement when the facilities were built some 12 odd years ago. The Hockey Club have honoured this and is a credit to the strength of their Association. The Town may be requested to assist through in kind support to the project; however, this will be resolved closer to the project commencing.

It is well known to Councillors and Officers how important this grant is to the UGSHA and the author expects that Councillors will wish to show their strongest support for this upgrade project.

Consultation:

- Upper Great Southern Hockey Association.
- Senior Town of Narrogin Staff

Statutory Environment: - Nil

Policy Implications: - Nil

Financial Implications:

Within the application there is no request for substantial cash funding; however, there is the request that some In-Kind works may be required once the project commences. The cost of this is unknown but as discussed with the Association this In-Kind would be seen through some labour, plant or waiving of fees for refuse disposal etc.

Strategic Implications:

The upgrade of the Association's playing surface is seen as being a very positive outcome for Council and the Narrogin and Greater Narrogin Community. Councils Strategic Plan states the following:

1.2	Investigate developing major events for the Town.	CEO	2014
1.5	Support Tourism, Arts and sport initiatives, recognising the economic impact that they provide to the businesses and general community.	DCCS/MLC	Ongoing
2.1	Continue to expand the Town's capacity and reputation as a venue for events, sports and seminars of local and regional significance.	DCCS	2015
2.7	Assist the local sporting groups to strategically develop their clubs and facilities within Narrogin.	DCCS	Ongoing

Voting Requirements: Simple Majority

Council Resolution: 0914.132

Moved Cr Bartron **Seconded Cr Schutz**

That Council:

Advise the Department of Sport and Recreation that the Community Sport and Recreation Facilities Fund grant application by the Upper Great Southern Hockey Association be fully supported and advise that it is list as Councils No 1 priority project.

The Department are also to be advised that this application is strongly supported due to the benefits that the upgrade of the playing surface will bring to the Narrogin and Greater Narrogin area, professional nature of the UGSHA, the high quality of the Grant application and that the UGSHA has proven to be sustainable and well financially managed

CARRIED 5/0

Please note: Cr McKenzie returned to the meeting at 7:51pm

Government of **Western Australia**
Department of **Sport and Recreation**

Office Use Only
TRIM: _____
Grant No: _____
Project Coordinator._____

CSRFF Grant Application Form

Year 2015/16 – 2017/18 Triennium

This application form can only be used for applications to be submitted in the 2015/16 funding round. No other forms will be accepted.

You MUST discuss your project with an officer from your nearest Department of Sport and Recreation office before completing and submitting your application. Failure to do so will render your project ineligible.

All applications MUST be submitted to your local government. Contact your local government to determine the cut off date for the submission of applications.

DSR Contact: Jenifer Collins	Date:	Office: Northam

TYPE OF GRANT:

☒	**ANNUAL GRANT $50,000–$166,666 (Up to $250,000 with development bonus)** The total project cost (GST exclusive) is $500,000 or less.
☐	**FORWARD PLANNING GRANT $166,667–$3 million** The total project cost (GST exclusive) exceeds $500,000. Note: where the grant requested is $166,667 or less but the total project cost is over $500,000, applicants are to follow the criteria for a Forward Planning grant but will be funded as an Annual grant.

Year of Claim (Applicable to forward planning grants only):
Please indicate the year that you would prefer to claim a grant. Only indicate first preference for funding in 2015/16 if all planning is finalised.

☒ **2015/16**	☐ **2016/17**	☐ **2017/18**

Would the project proceed if funding was allocated in a later year? ☒ Yes ☐ No
If yes, how would the project be impacted (e.g. – delayed etc)?

The existing turf was scheduled to be replaced in 2012. The additional years of playing on the existing turf has created an unsafe playing surface, particularly in the last 12 months. An Occupational Health and Safety review of the turf conducted in April 2014 confirmed that although the turf had been managed exceptionally well, the 2014 playing season would have to be the last.

As such the executive of the UGSHA deemed the existing playing surface to be unplayable past September 2014. This would leave the UGSHA with two options; a) upgrade the turf at full cost to the UGSHA, or b) not play on the turf for the 2015 winter season.

Option A would commit the UGSHA to sourcing a loan. This would prohibit the UGSHA from continuing to invest in the subsequent replacement of the playing surface as the emphasis would be shifted to debt reduction, making planning for the next 10 years untenable.

Option B would result in all winter games being played on grass surfaces in the 2015 season. The consequences of this would be significant; the association would not be able to attract regional and state level games during this time, player participation would decline and there would be financial implications for the association. Further delays in the upgrade of the turf would also mean summer hockey could not be played.

Should the UGSHA not receive the CSRFF grant to upgrade the turf this year, the executive of the UGSHA believe that the long-term sustainability of the association would compel us to go with Option A. This is certainly not ideal as that level of debt reduction would have an effect on long-term planning.

How would the resulting cost escalation be funded?

Internal revenue raising (through the hospitality area that the UGSHA manages at the Narrogin Hockey Stadium) within UGSHA is anticipated to cover the subsequent upgrade of the turf in 2025. However if a bank loan is required, the additional financial burden of debt reduction will compel the association to seek additional funds or grants.

Applicant's Details:

Organisation Name:	Upper Great Southern Hockey Association				
Postal Address:	PO Box 240				
Suburb:	NARROGIN	State:	WA	Postcode:	6312
Street Address:	Narrogin Hockey Stadium, Clayton Road				
Suburb:	NARROGIN	State:	WA	Postcode:	6312

Preferred Contact Person:
All application correspondence will be directed to this person

Name:	MARK REGAN	Title:	Dr ☐ Mr ☒ Mrs ☐ Ms ☐
Position Held:	PRESIDENT		
Business Phone:	9881 2086	Facsimile:	9881 1851
Mobile Phone:	0417 188 440	Email:	mark.regan@wn.com.au

Organisation Business Details:

Does your organisation have an ABN?	Yes ☒ No ☐	ABN: 12547002356	
Is your organisation registered for GST?	Yes ☒ No ☐	* Note, in order to be eligible for funding you must attach a copy of the Incorporation Certificate. LGAs exempt.	
Is your organisation not-for-profit?	Yes ☒ No ☐		
Is your organisation incorporated?	Yes ☒ No ☐	Incorporation #: A0821096M *	
Bank details:	Bank: WESTPAC	BSB: 036-167	A/c: 18 18 13

Local Government Authority Details:

LGA:	TOWN OF NARROGIN		
Contact:	AARON COOK	Title:	Dr ☐ Mr ☒ Mrs ☐ Ms ☐
Position Held:	CHIEF EXECUTIVE OFFICER		
Business Phone:	9881 1944	Facsimile:	9881 3092
Mobile Phone:	0407 522 297	Email:	aaron@narrogin.wa.gov.au

PROJECT DETAILS

Project Description:

UPGRADE OF THE PLAYING SURFACE at the NARROGIN HOCKEY STADIUM

The upgrade of the playing surface to a Federation of International Hockey (FIH) standard is a sub-project of the bigger project of upgrades to the Narrogin Hockey Stadium from 2012 to 2014. Other sub-projects already completed include an electronic LED scoreboard and outdoor broadcast room, upgrading of the turf lights to an international standard of 500 lux and upgrading the playing goals to Olympic standard. Additional pending sub-projects are the upgrade of the base of the playing surface from crushed granite to hot-mix, and the upgrade of the dug-outs and seating arrangements on the western side of the stadium.

The upgrade of the playing surface project intends to: a) lift and dispose of the existing playing surface and shock pad, b) upgrade to a 15mm shock pad, and c) upgrade to a new synthetic grass hockey surface.

The upgrade of the playing surface at the Narrogin Hockey Stadium is in line with HockeyWA's Facility Management Plan. It is vital that the sub-surface is of a high standard when a new turf is laid to ensure that the maximum years of usage can be obtained from the new, improved playing surface.

Project location:	Narrogin Hockey Stadium, Clayton Road, Narrogin		
Land ownership:	Who owns the land on which your facility will be located? Town of Narrogin Lease Expiry (if applicable):		
Planning approvals		If no, provide the date it will be applied for:	
Where applicable, has planning permission been granted? (LGA)		Yes ☒ No ☐	___/___/___
Department of Aboriginal Affairs?		Yes ☐ No ☒	___/___/___
Department of Parks and Wildlife? (Environmental, Swan River)		Yes ☐ No ☒	___/___/___
Native Vegetation Clearing Permit?		Yes ☐ No ☒	___/___/___
Please list any other approvals that are required?		Yes ☐ No ☐	___/___/___

What discussions have been held with adjoining local authorities?
Letters detailing the project and the reasoning behind it have been sent to the 10 surrounding local government councils. Teams from these areas compete in the UGSHA competition and it was deemed important to keep all of these bodies up-to-date with plans that impact their ratepayers.

Approximate distance from proposed project to nearest adjoining council boundary: 1km

Have you discussed this project with Department of Infrastructure and Regional Development (Federal Government)**?** Yes ☐ No ☒

If so, are you seeking funding from them? Yes ☐ No ☒

Contact:

How will your project increase physical activity?

Hockey is a major sport played in the Upper Great Southern and since the original turf was laid in 2002 the number of teams competing in the UGSHA has remained around 50. However, the number of players involved in those teams has increased from the average 11 or 12 to around 14 or 15 players per team.

During the same period of time other sports have seen team numbers fall. Having a playing surface which is of an international standard can only enhance the profile of hockey in the region and subsequently encourage further players to take up the sport.

An increase in UGSHA players being selected for State sides can be attributed to their ability to develop greater skills though their access to training and playing on a surface which is comparable to those found in metropolitan clubs. The turf has allowed UGSHA to host Perth league hockey games – which has showcased the region to city visitors. In turn this has developed bonds between UGSHA and metro clubs which has allowed UGSHA to bring high level coaches(for both players and officials) to the region.

Upgrading the turf will allow the UGSHA to continue to develop player skill levels to a high international standard.

Without it players who show promise will have to travel further to access such facilities and they will be lost to the UGSHA and the wider regional community.

Do you share your facility with other groups? Yes ☒ No ☐ If so, who: The Narrogin Hockey Stadium is part of the Narrogin Regional Recreation Sports precinct.

This precinct caters for a number of sports including, hockey, netball, basketball, swimming, football and others.

While the Hockey Stadium is designed solely for hockey usage – it is utilised by a number of groups of which the UGSHA is the main user group. Other groups which utilise the facilities include the Narrogin Senior High School's Hockey Academy for weekly training sessions; other regional hockey associations for development camps and local and other regional primary schools for hockey carnivals.

List up to three sport and recreation activities which will **directly benefit** from your proposal. Please indicate the approximate % usage of the facility (or part of the facility relating to this proposal).

Sport/community organisation	% use of the facility	Hours per week
Upper Great Southern Hockey Association Winter competition – train and play	April –September 95%	36 hours
Narrogin Senior High School Hockey Academy	Year round 3%	Days vary according to school program
Summer hockey competition State and other hockey teams (train and play at the stadium) Regional Associations (development camps and training days)	2%	Varies according to need

Activity/sport membership numbers over the past three years relevant to your project. For example, if a bowls project, golf members not relevant; social membership numbers not applicable.

Note: if membership is not applicable, ie recreation facility or aquatic centre, please enter the number of users of the facility.

2011/12	47 teams	**2012/13**	50 teams	**2013/14**	52 teams

State Sporting Associations are involved in the assessment of applications and may be able to provide valuable information when planning you project, particularly in relation to technical design issues. They should be consulted as part of the application process.

What is the name of the State Sporting Association for your activity/sport?	
HOCKEY WA	
Have you discussed your project with your State Sporting Association? Yes ☒ No ☐	
Contact Name: PETE CHURACK	Date of contact: ONGOING

PLANNING

You need to demonstrate that you have undertaken an appropriate level of planning for your project. Questions 1 – 24 must be completed for all applications. Forward Planning grant applications must complete all the questions in detail. Annual grant applications must provide responses where appropriate and relative to the project.

Attach your responses (in numerical order) to the application form. If you believe that you have a valid reason for answering in the negative to a question please detail that reason.

Ensure that you have addressed the Key Principles of Facility Provision (see Guidelines for a CSRFF application), as they apply to your project. Questions 1 to 24 below relate directly to these principles.

You are expected to provide detail on the planning, management and financial viability of your project. Where research findings are used to justify a project a range of research techniques should be evident in the methodology used. When using comparative analysis local conditions must be considered.

All assumptions must be clearly stated.

1.	**When did you complete your needs assessment?** (This is a formal analysis required for projects over $500,000). Upper Great Southern Hockey Association established its first synthetic turf in Narrogin in 2002, at which point a needs assessment was completed. A subsequent needs assessment was conducted in 2014.

	How has the need for your project been identified and assessed? The need for this project has been derived from five key documents: -Original Development Plan for the Narrogin Hockey Stadium in 2001 -Occupational Health and Safety Review in April 2014 -Needs Assessment in 2014 -HockeyWA Facilities Management Plan in 2012 -UGSHA Strategic Plan 2012-2018 The assessment and decision-making of this project has been completed by the executive of the UGSHA, based on these five documents.
	Is the need or a part of the need that you have identified already being catered for? Yes, however the current playing surface does not comply with the FIH standards nor the Occupational health and Safety review, making it obsolete past September 2014.
2.	**Have you undertaken a feasibility study?** (must be included with Forward Planning applications). Yes ☐ No ☒
	If not, how have you assessed the feasibility of your project? The need to upgrade the current synthetic turf has been known by the UGSHA since it was originally laid in 2002. All synthetic turfs have a limited life span and their upgrading and replacement is always factored in when they are established.
3.	**What alternatives were considered and why were they rejected?** No alternatives were considered as upgrading the turf once its lifespan had expired was always part of the UGSHA's original 2002 plan for the hockey stadium. It has opted to go for a top quality FIH international standard surface to ensure the future long-term viability of the stadium. A lower quality product was considered however it was discounted due to there being no evidence of longevity with that surface. **Did you consider sharing with another group?** (Please detail). No – hockey turfs are a very sport specific surface and the UGSHA (when you consider winter and summer competitions, training times, NSHS Hockey Academy usage) is a year-round user of the facility.
4.	**How does your project fit into your:** • **Club's strategic plan or development plan?** Very important. This upgrade is a fundamental part of the facilities component of the UGSHA Strategic Plan (see attached). • **State Sporting Association's strategic or development plan?** Very important. The upgrade of the Narrogin Hockey Stadium playing surface was earmarked in the HockeyWA Facilities Management Plan. • **Local authority's strategic or development plan?** The Town of Narrogin Strategic Plan states the following: 1.2 Investigate developing major events for the Town. 1.5 Support Tourism, Arts and sport initiatives, recognising the economic impact that they provide to the businesses and general community. 2.1 Continue to expand the Town's capacity and reputation as a venue for events, sports and seminars of local and regional significance. 2.7 Assist the local sporting groups to strategically develop their clubs and facilities within Narrogin.
5.	**What impact is your project likely to have on other facilities and services in your local and regional area?** As part of the Narrogin Regional Recreation Complex the upgrading of the synthetic hockey turf will only add to the value of the complex. Once completed the new synthetic turf will elevate the hockey playing surface to a degree where the UGSHA will be able to tender to host National events. Hosting such events can only benefit all businesses and services in the region.
6.	**Is your facility multi-purpose** (i.e. caters for a variety of activities at one time)**?** Yes ☐ No ☒ **If so, does it service more than one LGA?** While the Narrogin Hockey Stadium is hockey specific it does cater for teams which draw players from 10 local government areas. It is also hired by other regional hockey associations and school groups.
	Site and locality maps should be included with all applications outlining where the proposed facility is located in relation to other sport and recreation infrastructure (where applicable).

7.	**Describe the consultation process undertaken for the project. For example, have you:**		
	• **Invited public submissions**	Yes ☐	No ☒
	• **Conducted a survey**	Yes ☐	No ☒
	• **Coordinated a public meeting**	Yes ☐	No ☒
	• **Held forums with key groups**	Yes ☒	No ☐
	• **Nominated a community representative to the project team;**	Yes ☒	No ☐
	Other, please detail Ongoing discussions with Hockey WA and the Narrogin Town Council.		
A range of resources regarding the development of sporting facilities are available on the website. DSR's Decision-Making Guide for Community Facilities and Services is useful to assist in determining the need for, and feasibility of, community and recreation services. The Guide is designed in such a way that it can be entered at any point in the planning process and used by planners for user groups with a range of skills and experiences.			

MANAGEMENT

8.	**Have you developed a management plan for your facility?** Yes ☒ No ☐ Please attach a copy with this application.	
	If not, please explain how you plan to address management issues i.e. attracting new members, building maintenance and repairs, replacement of broken or stolen items and/or raise sufficient revenue to cover operating costs? An asset management plan detailing provisions for life of asset costs should be provided for projects over $500,000.	
9.	**How have you catered for management needs in your design (if required)?** Consider access, usage and supervision. See attached management plan	
10.	**Was an experienced facility manager, builder or technical expert involved in planning the design of your project?** Please outline their experience. Quotes for the new upgraded playing surface have come from experienced companies. When work is commenced on the upgrade it will be conducted and supervised by a representative of a company recognized as a professional in the synthetic surface/turf industry.	
11.	**If you propose to share a facility, have other groups been asked what features they need?** List these needs and describe how they will be accommodated, either through your project's location, design or the way in which it will be managed.	
12.	**Have you considered:**	
	• **child care facilities**	Yes ☒ No ☐ Provided at the Narrogin Regional Recreation complex already.
	• **access for low income earners**	Yes ☒ No ☐ UGSHA is registered with Kidsport
	• **access for the disabled**	Yes ☒ No ☐
	• **access for seniors**	Yes ☒ No ☐
	• **access on a casual and short-term basis**	Yes ☒ No ☐
	Please attach a copy of the proposed fee structure.	

DESIGN

Grant applications are required to provide a **locality map, site map** and **building plans**. Plans are to be submitted in **A3 format.**

13.	**Have you written a design brief for your project?** ☒ Yes ☐ No If yes, please respond to the following points:
	Describe the process used to obtain an estimate of construction cost. On-site visits were held with consultants from companies dedicated to the manufacture and laying of synthetic turf and then quotes were obtained from said companies.
	An estimate from a qualified consultant in the building industry (e.g. architect, quantity surveyor, builder, engineer, etc.) must be provided with your application. See supporting documents
14.	**What design features will allow your facility to meet changing needs over time?** See attached supporting documents

	Is your current proposal likely to limit any future development on your site? ☐ Yes ☒ No **If yes, how?**
15.	**How have you determined the most appropriate technical specification for the equipment and systems for your facility (i.e. filtration, lighting, water heating, air quality – as required)?** The technical specifications for a hockey playing surface are determined by Hockey Australia and FIH and both were key design criteria for this project.
	Do they meet Australian Design Standards for your sport or recreation needs? This will be an assessment factor. ☒ Yes ☐ No
	Please refer to DSR's Asset Management Guide on the website for a list of common standards and **note that projects that do not meet Australian Design Standards are ineligible for funding.**
16.	**What energy and water efficient products or design considerations will be included in your facility or project?** (e.g. solar hot water, natural light, geothermal, water recycling etc.). The weave design of turf selected for the Narrogin Hockey Stadium upgrade requires less water and is classed as a hybrid turf. Also the current water guns used at the stadium are designed to operate with minimal water wastage.
17.	**If your project involves floodlighting, have you determined whether there is a need to upgrade your power supply?** If so, is this allowed for in your application? Upgrading of the turf's lighting has already been down with funding from the UGSHA and Shire of Narrogin.

FINANCIAL VIABILITY

It is understood that some facilities will operate at a loss. It is not necessary to suggest that all facilities will break even or make a profit. The intent of this assessment is to be sure that applicants have a realistic understanding of the impact of their project on the operational budget, membership costs or entry fees and an appreciation of the funding requirements over the life of the facility.

18.	Signage in accordance with the State Governments Signage Style (November 2013) must be erected during construction periods for all **projects that have a total project cost of over $250,000 or those deemed necessary by DSR**. **Has this cost been incorporated into estimated project costs ($1,500)?** ☒ Yes ☐ No
19.	**Have you applied a Life Cycle Cost Analysis to your project?** This is mandatory **for projects that have a total project cost over $500,000.** ☐ Yes ☒ No
DSR's Life Cycle Cost Guidelines are available on the website. Developing a life cycle cost approach when considering your project's parameters will assist to make effective financial, economic and operationally sustainable decisions. Applicants may use alternative computer programs to demonstrate compliance.	
20.	**Is your organisation able to meet the ongoing operating costs of your projec**t? (e.g. wages, power) ☒ Yes ☐ No
	For **Annual Grant applications** please attach a projected income and expenditure statement for the first year of operation, detailing operating costs, and user fees. See supporting documents
	Forward Planning applications are to provide income and expenditure statements for the first three years of operation, and include an assessment of the potential impact on the project of social trends, competition, the strategic plans of neighboring local authorities and other factors. Applicants are to consider the financial impact the development of the project will have on existing facilities within the identified catchment area. Applications to include details of a number of scenarios related to projected income and expenditure. This type of sensitivity analysis based on worst, average, and best-case performance should be used to inform proponents of the project development to the variables and consequent implications. A list of assumptions should be included with all analyses. **Attach your audited income and expenditure statements for the last three years (LGAs exempted).**
21.	**Who will be responsible for any operational deficit and how will it be funded?** The Town of Narrogin in conjunction with the Upper Great Southern Hockey Association. It will be funded through a fee structure and the UGSHA's Turf Replacement Fund.

22.	**Will an Asset Replacement Fund be created to ensure the ongoing maintenance of the facility** ☒ Yes ☐ No
	If yes, how have you determined the required annual contributions? If no, why not? Contributions to the Turf Replacement Term Deposit have been made by the UGSHA since the original turf was established in 2002. These contributions were made from fundraising activities and the money earned at the stadium's hospitality area. Such contributions will continue once the new turf has been installed and at this stage the UGSHA can see no reason to increase members fees as no future decline in income is foreseen.
	Where the facility is owned by an LGA, how will the funds be accounted for and what agreement exists with the council? The agreement with the Town of Narrogin is that the UGSHA manages the stadium and contributes to the maintenance and replacement of the turf. In the past the UGSHA has taken on the majority of maintenance work at its own cost and this is likely to continue in the future.

PROJECT DELIVERY

23.	**Please indicate key milestones of your project. The key milestones need to be realistic and demonstrate that the project can be delivered in the timeframe.**

Task	Date
Council approvals	15 September 2014
Preparation of tender/quotes	22 August 2015
Issuing of tender	September 2015
Site works commence	13 February 2016
Construction starts	15 March 2016
Project 50% complete	30 March 2016
Project completed	30 April 2016
Handover – final inspections	1 May 2016
Project Acquitted	31 May 2016

24.	**Are there any operational constraints that would impact on the construction phase of your project?** (such as your sporting season or major annual event, i.e. if your sport is a winter sport, when will the project commence to ensure that inclement weather does not hinder progress) – provide details. As hockey is a predominantly a winter sport the project would be scheduled to start in February 2015. This may impact on summer hockey fixtures but the UGSHA has received support from the summer hockey clubs to postpone the second half of the summer hockey season. The full winter hockey season would commence in May 2015 so the project would need to be completed by the end of April 2015.

GST

Grant payments are payable to the applicant/grantee only. This may have taxation implications for grantees. If grantees wish specific advice relating to their grant, this can be obtained from the Australian Taxation Office (ATO). Please note depending upon the value of the project and/or grant, the ATO may require an organisation be registered for GST. If the applicant is registered for GST, the grant is grossed up with the GST amount.

PRIVACY STATEMENT AND STATEMENT OF DISCLOSURE

The Organisation acknowledges and agrees that this Application and information regarding it is subject to the *Freedom of Information Act 1992* and that the Grantor may publicly disclose information in relation to this Application, including its terms and the details of the Organisation.

Any information provided by you to DSR can be accessed by you during standard office hours and updated by writing to DSR or calling (08) 9492 9700. All information provided on this form and gathered throughout the assessment process will be stored on a database that will only be accessed by authorised departmental personnel and is subject to privacy restrictions.

DSR may wish to provide certain information to the media for promotional purposes. The information will only include the applicant's club name, sport, location, grant purpose and grant amount.

APPLICANT'S CERTIFICATION

I certify that the information supplied is to the best of my knowledge, true and correct.

Name: MARK REGAN

Position Held: PRESIDENT
UPPER GREAT SOUTHERN HOCKEY ASSOCIATION

Signature: _____

Date: _____

LODGEMENT OF YOUR APPLICATION

- Applications are to be received in **hard copy** and should be stapled or clipped at the top left-hand corner. Please do not bind.
- It is recommended that you **photocopy your completed application form**, including attachments for your own records and future audit purposes.
- All **attachments** and supporting documentation (see next section) should be **clearly identified** and securely attached to the application form.
- **Applications must be submitted to your Local Government Authority** by the Local Government's advertised cut-off date to ensure inclusion at the relevant Council Meeting.

The following documentation must be included with your application. Applicants may wish to supply additional RELEVANT information.

Grants $50,000–$166,666 (where the total project cost is $500,000 or less):

☐	**Application form** (including any attachments).
☐	**Incorporation Certificate.**
☐	**Two written quotes**. Quantity Surveyor costs will be accepted; however the responsibility lies with the applicant to ensure the validity of the information. DSR accepts no responsibility for cost variations to projects that were provided a grant based on submitted Quantity Surveyor costs.
☐	If your project involves the upgrade of an existing facility, include **photograph/s** of this facility.
☐	**Locality map, site map and building plans** (in relevant constructions projects), including where the proposed facility is located in relation to other sport and recreation infrastructure.
☐	**Income and expenditure statements** for the current and next financial years. (LGAs exempted).
☐	**Written confirmation of financial commitments** from other sources including copies of **council minutes.** (If a club is contributing financially then evidence of their cash at hand must be provided).
☐	For resurfacing projects, a written guarantee from the supplier of the product that clearly identifies the product's life expectancy.
☐	**Itemised project cost for components** and identified on the relevant quote for each (including cost escalation). Also construction signage costs if relevant.
☐	For floodlighting projects, a **lighting plan** must be supplied showing lux, configuration and sufficient power supply

Grants $166,667–$3 million (where the total project cost exceeds $500,000) including the above:

☐	Needs assessment
☐	Management plan
☐	Locality map, site map and building plans (in relevant constructions projects) in AutoCad or similar format with an additional electronic version
☐	Feasibility study
☐	Concept design
☐	Life Cycle Cost Analysis

Your application will be considered not eligible if:

- You have not discussed your project with the Department of Sport and Recreation and your State Sporting Association.
- You do not meet the eligibility criteria for the grant category to which you are applying.
- You have not included with your application all the relevant required supporting documentation. There is no onus on Department staff to pursue missing documentation.
- Applicants/projects that have received a CSRFF grant in the past and have not satisfactorily acquitted that grant. In some cases this may apply to localities where other significant projects have not been progressed or have not completed a previous project in accordance with the conditions of the grant provided. An assessment will be made and if no physical progress has occurred, new applications may not be recommended.
- It is not on the 2015/16 CSRFF application form.
- The project for which application is made is specifically excluded from receiving CSRFF support.

DEVELOPMENT BONUS APPLICANTS ONLY

If you applied for a CSRFF grant for more than one third of the cost of the project, please provide evidence of meeting at least one of the following criteria**.**

You MUST contact your local DSR office to determine eligibility before applying.

Category		**Details**
Geographical location	☐ Regional/Remote location ☐ Growth Local Government	
Co-location	☐ New ☐ Existing	
Sustainability initiative	☐ Water saving ☐ Energy reduction ☐ Other	
Increased participation	☐ New participants ☐ Existing participants – higher level ☐ Special interest ☐ Other	

PROJECT BUDGET

ESTIMATED EXPENDITURE

Please itemise the components of your project in the table below, indicating their cost and which quote or part of quote was used to estimate this. Quantity Surveyor costs will be accepted however the responsibility lies with the applicant to ensure the validity of the information. A contingency allowance is considered an acceptable component.

Project Description (detailed breakdown of project to be supplied	**$ Cost ex GST**	**$ Cost inc GST**	**Quote Used (list company name and quote no)**
ie Electrical Works	*25,000*	*27,500*	*B & S Electrical*
Lift and dispose of synthetic grass	9,410	10,351	TEAM Sports
Lift and dispose of in-situ shock pad	11,215	12,366	TEAM Sports
Install 15mm Shock pad	130,412	143,453	TEAM Sports
Install New synthetic grass- Aqua turf Evolution	291,015	320,117	TEAM Sports
Project Signage	1500	1650	Trevor Stringer
Donated materials (Please provide cost breakdown)			
Volunteer Labour (Please provide cost breakdown)	17,000		
Sub Total	460,552	487,937	
Cost escalation			***Please explain amount used***
a) Total project expenditure	460,552	487,937	

- At least **two written quotes** are required for each component.
- If your project is a floodlighting installation or upgrades, please ensure that the power supply is sufficient and no upgrade will be required. If upgrade is required and not budgeted for, the grant will immediately be withdrawn. A **lighting plan** must be supplied showing lux and configuration.
- Projects that do not meet **Australian Standards** are ineligible for funding.

PROJECT FUNDING

Source of funding	$Amount ex GST	$ Amount inc ST		Funding confirmed Y / N	Comments to support claim (please attach relevant support)
Local government	0	0	**LGA cash and in-kind**		
Applicant cash	295,702	325,292	**Organisation's cash**	Y	UGSHA has been putting money aside specifically for the turf replacement.
Volunteer labour	17,000	17,000	**Cannot exceed applicant cash and LGA contribution – max $50,000**		
Donated materials			**Cannot exceed applicant cash and LGA contribution**		
Other State Government funding					
Federal Government funding					
Other funding – to be listed			**Loans, sponsorship etc**		
CSRFF requested	147,850	162,645	**up to 1/3 project cost**		
Development Bonus			**Up to ½ project cost**		
b) Total project funding	460,552	504,937			
***Note: If the funding approved is less than funding requested for this project, or the project is more expensive than indicated in this budget, where would the extra funds be sourced from?**					

GST

Grant payments are payable to the applicant/grantee only. This may have taxation implications for grantees. If grantees wish specific advice relating to their grant, this can be obtained from the Australian Taxation Office (ATO). Please note depending upon the value of the project and/or grant, the ATO may require an organisation be registered for GST. If the applicant is registered for GST, the grant is grossed up with the GST amount.

FINANCIAL SUMMARY

a) Total project expenditure (ex GST)	460,552
b) Total project funding (ex GST)	460,552
c) Project variance*	0

- ***Balance between a) and b) should equal $0**

PROJECT ASSESSMENT SHEET

This page is for the use of the relevant Local Government Authority to be used for both community and LGA projects. Please attach copies of council minutes relevant to the project approval.

Name of Local Government Authority: Town of Narrogin
Name of Applicant: Upper Great Southern Hockey Association

Note: The applicant's name cannot be changed once the application is lodged at DSR.

Section A

The CSRFF principles have been considered and the following assessment is provided:
(Please include below your assessment of how the applicant has addressed the following criteria)

All applications

	Satisfactory	Unsatisfactory	Not relevant
Project justification	☒	☐	☐
Planned approach	☒	☐	☐
Community input	☐	☐	☒
Management planning	☒	☐	☐
Access and opportunity	☒	☐	☐
Design	☒	☐	☐
Financial viability	☒	☐	☐
Co-ordination	☒	☐	☐
Potential to increase Physical activity	☒	☐	☐
Sustainability	☒	☐	☐

Development applications only

	Satisfactory	Unsatisfactory	Not relevant
Location	☐	☐	☐
Sustainability	☐	☐	☐
Co-Location	☐	☐	☐
Special Interest Group	☐	☐	☐

Section B

LGA – priority ranking of this project	1
Priority ranking of no of applications received	1 of 1 applications received
Is this project consistent with the	☒ Local Plan ☐ Regional Plan ☐ State Plan
Have all planning and building approvals been given for this project?	☒ Yes ☐ No
If no, what approvals are still outstanding?	

Project Rating (Please tick the most appropriate box to describe the project)

A	Well planned and needed by municipality	☐
B	Well planned and needed by applicant	☒
C	Needed by municipality, more planning required	☐
D	Needed by applicant, more planning required	☐
E	Idea has merit, more planning work needed	☐
F	Not recommended	☐

Our whole Community wins

LGA comments (Required):

The Upper Great Southern Hockey Association is a progressive and thriving association that has grown in numbers and strength consistently over many years.

This upgrade project is integral to the continuing advancement of the Association in Narrogin through the improvement of the playing surface and as such the ability to attract and host state and national level competitions.

The Association has been strong within its structure to ensure that funding is raised and allocated for the replacement of the playing surface and this will continue into the future. Their strong "can do" attitude is in partnership with the Town of Narrogin and the Shire of Narrogin and is evidence of the professionalism that the Association embodies in regards to Hockey and sport in Narrogin and the regional area.

The Town of Narrogin Council is a strong supporter of this project due to the continued emphasis on playing sport, social integration and higher level exhibition and competition hockey being played in Narrogin.

As such, the Town of Narrogin places its full support behind this project.

Signed **Position** CEO **Date** 9th September 2014

Applications for CSRFF funding must be submitted to your Department of Sport and Recreation office by **4pm on the last working day in September.** Late applications cannot be accepted in any circumstances.

DSR OFFICES

PERTH OFFICE
246 Vincent Street
Leederville WA 6007
PO Box 329
Leederville WA 6903
Tel: (08) 9492 9700
Fax: (08) 9492 9711

PEEL
Suite 94
16 Dolphin Drive
PO Box 1445
Mandurah WA 6210
Tel: (08) 9550 3100
Fax: (08) 9550 3199

PILBARA
2/3813 Balmoral Road
PO Box 941
Karratha WA 6714
Tel: (08) 9182 2100
Fax: (08) 9182 2199

SOUTH WEST
80A Blair Street
PO Box 2662
Bunbury WA 6230
Tel: (08) 9792 6900
Fax: (08) 9792 6999

GREAT SOUTHERN
22 Collie Street
Albany WA 6330
Tel: (08) 9892 0100
Fax: (08) 9892 0199

GASCOYNE
4 Francis Street
PO Box 140
Carnarvon WA 6701
Tel: (08) 9941 0900
Fax: (08) 9941 0999

GOLDFIELDS
106 Hannan Street
PO Box 1036
Kalgoorlie WA 6430
Tel: (08) 9022 5800
Fax: (08) 9022 5899

KIMBERLEY – Kununurra
Government Offices
Cnr Konkerberry Drive and
Messmate Drive
PO Box 1127
Kununurra WA 6743
Tel: (08) 9166 4900
Fax: (08) 9166 4999

WHEATBELT - NORTHAM
298 Fitzgerald Street
PO Box 55
Northam WA 6401
Tel: (08) 9690 2400
Fax: (08) 9690 2499

WHEATBELT – NARROGIN
Government Offices
Level 2, 11-13 Park Street Narrogin
WA 6312
Telephone 0429 881 369
Facsimile (08) 9881 3363

MID-WEST
77 Marine Tce
PO Box 135
Geraldton WA 6531
Tel: (08) 9956 2100
Fax: (08) 9956 2199

KIMBERLEY – Broome
Unit 2, 23 Coghlan Street
PO Box 1476
Broome WA 6725
Telephone (08) 9195 5750
Facsimile (08) 9166 4999
Mobile 0438 916 185

10.2.345 RURAL COMMUNITY SUPPORT SERVICES REQUEST FOR SPONSORSHIP

File Reference: **26.3.12**
Disclosure of Interest: **Nil**
Applicant: **Rural Community Support Service**
Previous Item Nos: **Nil**
Date: **17 September 2014**
Author: **Susan Guy Manager Leisure and Culture**

Attachments:

Letter of Request for Sponsorship from Rural Community Support Service' Program Coordinator

Summary:

Council is requested to consider sponsoring to the amount of $1,000 a youth event planned by the Rural Community Support Service (RCSS) during Mental Health Week in October 2014.

Background:

The RCSS & Wheatbelt Primary Health are jointly planning a number of activities over the upcoming Mental Health Week - 6 to 10 October which also falls during school holidays. On Thursday 9 October they have scheduled an event titled "Youth Unleashed", developed in consultation with Narrogin Senior High School students.

The RCSS is funded by the Commonwealth Department of Health through the Southwest WA Medicare Local. It is contributing $6,000 to the event from its Mental Health Week Budget of $7,500. It has recently and unfortunately incurred a shortfall of $1,000 in its budget for Youth Unleashed due to a sponsor being unable to commit this amount as originally planned. This otherwise well organised event with substantial youth input is at risk of being compromised if the shortfall cannot be addressed. The RCCS has advised that the following agencies/organisations have made the following contributions to this event:

- Wheatbelt Primary Health (in-kind contribution & production of promotional Flyers);
- PCYC – (in-kind contribution - personnel to run activities);
- YMCA – (reduction in venue hire fees);
- Radio West Hot/FM – (in-kind free promotion);
- Fair Game WA – (in-kind contribution of personnel to run activities); and
- RDA Wheatbelt – Youth Connections – (financial contribution)

The RCCS Program Coordinator has written to the CEO requesting Council sponsor the event in the amount of $1,000 thus assisting in addressing the shortfall. (See attachment). The Town's sponsorship will be acknowledged with its logo included in promotional material in radio promotion and in speeches during the event.

Comment:

Mental Health Week raises community awareness about mental health issues and is held every October each year to coincide with World Mental Health Day on 10 October.

The Mental Health Commission states that "The aim of Mental Health Week is to promote social and emotional wellbeing to the community, encouraging people to maximise their health potential, enhancing the coping capacity of communities, families, individuals and increasing mental health recovery". The Commission cites that some 75 per cent of all severe mental illness starts before the age of 24 and by age 21, just over half of young people will have experienced a diagnosable psychiatric disorder. Suicide accounts for 17.8 per cent of deaths in the 15-19 year age group and nearly a quarter of all deaths in the 20-24 year age group.

Narrogin is home to 564 persons in the 15-24 year age group representing 13 percent of its total population. Both Western Australia and Australia have the same proportion of young people in this age bracket. The Town's ability to deliver community events including youth events, is hindered by a lack of resources both financial and human. Sponsorships and partnerships with sectoral stakeholders represents a strategy to address this resource shortage. Council is encouraged to consider sponsoring the event Youth Unleashed as one way to support the drive to raise awareness of mental health issues among its young people, contribute to their social development and support a school holiday program.

Consultation:

Ms Jo Drayton, Program Coordinator, Rural Community Support Service

Statutory Environment: - Nil

Policy Implications: - Nil

Financial Implications:

The $1,000 sponsorship to be allocated from allocation to the Reserve Fund.

Strategic Implications: - Nil

Voting Requirements: - Simple Majority.

OFFICER'S RECOMMENDATION

That Council:

Sponsor to the amount of $1,000 "Youth Unleashed", a youth event planned by the Rural Community Support Service during Mental Health Week in October 2014.

Council Resolution: 0914.133

Moved Cr Bartron **Seconded Cr Kain**

That Council:

Sponsor to the amount of $1,000 “Youth Unleashed”, a youth event planned by the Rural Community Support Service during Mental Health Week in October 2014 and is to be funded from the Community Chest remaining funds.

CARRIED 6/0

Reason for Change: To allocate that the funds were to allocated from the remaining funds within the Community Chest account.

Aaron Cook
CEO
Town of Narrogin
PO Box 188
NARROGIN WA 6312

Dear Aaron,

I am writing to you in my capacity as Program Coordinator for Rural Community Support Service, a primary mental health service, located in Narrogin but providing outreach social support to 27 Shires across the Wheatbelt.

Rural Community Support Service are hosting "Youth Unleashed' during 2014 Mental Health Week and I am seeking financial support/sponsorship from the Town of Narrogin ($1,000) that could be utilised for this Event.

This is the second year that Rural Community Support Service have held 'Youth Unleashed' during Mental Health Week. Last year's Event attracted around 70 young people.

In 2015, our target audience is young people aged 13 – 18 years (high school aged). Consultation has been undertaken with a cross section of students from Narrogin Senior High School to ascertain what they would like at this Event.

A Youth Health & Wellbeing Pit Stop/On-Line Survey will be undertaken at this Event to identify young people's protective and risk factors and to gauge a holistic health overview of young people in the Narrogin District. This data will then be compared to State and National data to identify specific areas of concern for the region's young people.

Research supports local knowledge that our young people are increasingly struggling to cope/deal with pressures of life including school, relationships breakdowns, high unemployment rates, drug and alcohol misuse and cyberbullying, to name just a few.

This 'local snapshot' of risk factors will provide valuable information/knowledge for agencies and the Town, and also identify lifestyle habits which could negatively contribute towards under-achieving at school or even disengaging with the education system.

Data will also be obtained on topics/information they would like further or more comprehensive education sessions on (these will be delivered as part of Rural

Community Support Service's Community Partnership with Narrogin Senior High School and will be delivered at their CHAT (Changing Healthy Attitudes Together) days in 2015.

We have secured the services of the following:

- Phil Doncon - http://www.phildoncon.com.au/
- Mad Cow Entertainment – Bucky Bull, Sumo Wrestling Suits
- Fair Game WA – Agility & Fitness Testing – Mini Basketball Comp
- YMCA – Gaelic Football, Floor Ball, Hand Ball
- Combat Adventures – Laser Tag - http://www.combatadventures.com.au/

I have secured agency/organisation contributions from:

- Wheatbelt Primary Health (in-kind contribution & production of promotional Flyers)
- PCYC – (in-kind contribution - personnel to run activities)
- YMCA – (Reduction in venue hire fees)
- Radio West Hot/FM – (in-kind free promotion)
- Fair Game WA – (in-kind contribution of personnel to run activities)
- RDA Wheatbelt – Youth Connections – (financial contribution)

Your favourable consideration of this request for Sponsorship would be greatly appreciated, as this specific Youth Event for young people will encourage positive behaviours, build social connections and capital.

If you require further information or clarification, please do not hesitate to contact myself.

Yours sincerely

JO DRAYTON
Program Coordinator
Rural Community Support Service

Winner – Mental Health Commission's Good Outcomes Awards – University of WA – Excellence in the provision of Rural and Remote Mental Health - 2013

Winner – Mental Health Commission's Good Outcomes Awards – Edith Cowan University Prevention & Early Intervention Award – 2008 & 2011

10.2.346 LEASE OF OLD DEPOT SITE (EX GREENLINE AG SITE)

File Reference: **5.6.16**
Disclosure of Interest: **Nil**
Applicant: **Narrogin Toyota**
Previous Item Nos: **Nil**
Date: **13 September 2014**
Author: **Colin Bastow - DCCS**

Attachments:

- Letter from Narrogin Toyota.
- Property aerial map showing proposed lease area.

Summary:

Council to consider a request to lease the Town's old works depot site which is located at 37 Fairway Street, Narrogin.

Background:

A letter was received from Narrogin Toyota request a lease of the Town's vacant old works depot site which is located at 37 Fairway Street, Narrogin for the purpose of storage and car washing whilst their new dealership building is being constructed.

Narrogin Toyota has subsequently made a verbal offer of $300 (Inc. GST) per week to rent a proportion of the site which contains the main building.

Work on the construction of the new dealership building is expected to commence within the next three weeks.

Comment:

The Town had contacted Ray White Narrogin to obtain a commercial valuation for the proposed lease area of the site as Narrogin Toyota does not want to lease the entire property. At the time of writing this report, the Town was still waiting for the written valuation. However during the onsite meeting with the representative of Ray White Narrogin, it was verbally communicated to the Author of this report that the site has an estimated valuation of $30,000 per year ($576.92 per week) plus outgoings.

Narrogin Toyota has requested that the Town advise them as soon as possible about their offer as works is about to start on their new dealership building within three weeks.

It is positive to see Narrogin Toyota upgrading their dealership buildings as this has a number of economic benefits for Narrogin and surrounding areas. Whenever possible the Town should encourage the development of local businesses as well as attracting new business to relocate to Narrogin.

The Town is not currently using the old works depot site and was planning to renovate the site before the property was leased again. There had been internal discussions about relocating the Towns works crew to this location however this appears to be very unlikely at this time due

to the pending merger with the Shire. Council will need to consider the long term future of this property as it is currently surplus to the Town requirements.

It is estimated by the Town that it would cost $30,000 to $40,000 to renovate the site as it has not had any major works for some time now. The Town was seeking grant funding to undertake this renovation works.

Consultation:

- Narrogin Toyota
- Ray White Narrogin
- Aaron Cook CEO
- Brian Robinson DTES

Statutory Environment:

Local Government Act 1995 - Section 3.58 Disposing of Property

The Town is required to advertising its intention to dispose of any property, which includes leased property. The advertisement is required to include the estimated market value of the property and the expected rental amount.

Policy Implications: - Nil

Financial Implications:

The Town would receive $272.73 (Ex GST) per week in rental of the site or $14,181.82 per year plus the lessee is to pay all outgoings.

Strategic Implications: - Nil

Voting Requirements: - Simple Majority

Council Resolution: 0914.134

Moved Cr Russell **Seconded Cr McKenzie**

That Council:

1. Approves the leasing of a portion of 37 Fairway Street, Narrogin to Narrogin Toyota at a weekly rental of $300.00 plus all outgoings as the Town wants to support development in Narrogin due to the expected economic benefits to the local community;
2. The lease is to be for an initial term of one year and subject to the agreement of both parties, including the option of a subsequent month by month lease term;
3. The CEO is authorised to prepare an appropriate lease agreement and undertake the required advertising of the lease; and
4. Approves the use of the common seal on the lease agreement;

CARRIED 6/0

Fairway St
assess_no: 01323414
address: 2831.101
108
Francis St
Fairway St
Forrest St
Forrest St

10.2.347 TOWN AND SHIRE OF NARROGIN BOUNDARY CHANGE

File Reference: **14.8.1**
Disclosure of Interest: **Nil**
Applicant: **Chief Executive Officer**
Previous Item Nos: **Various**
Date: **18th September 2014**
Author: **Mr Aaron Cook**

Attachments: - Nil

Summary:

It is proposed that Council resolve to progress forward with merger process and the funding allocated from the State through commencing public consultation regarding the proposed merger/boundary change of the Town and Shire of Narrogin.

Background:

The Town and Shire of Narrogin recently met individually several weeks ago to discuss the proposed budget offer from the State. The Shire CEO advised the author that the Shire had discussed the matter and agreed to progress to the informal meeting of both Councils. The Town Council then met informal and accepted to work with the revised budget allocation, although concerned that this may not cover the full cost of the merger. The discussion focused on the repayment of the Financial Operating System Loan and that should this not occur that this would allow the full budget to be allocated to the merger and that should there be funds remaining once completed that this be utilised to repay the loan.

From this meeting on the 10th September 2014 both Councils met informally to discuss the thoughts of each Council. The Town stated that it was happy to continue to progress and work with the funding that has been provided. However, the Shire of Narrogin stated that there was discussion at the previous informal meeting and one that was held prior to the joint meeting on the 10th and that several Councillors had raised concerns over the funding from the State and the agreed rates increases and that a decision would be made at the next Council meeting held on the 18th September if they were to continue in the process.

Comment:

The proposed budget of $1,212,000 provided by the State does not cover the amount requested by both Councils being $1.6 Million. It is noted that this amount, although reduced, is still a substantial allocation of funding to the process and deserves serious consideration. As has been presented to Council Members informally, within this amount is the repayment of the Financial Operating System already purchased that is valued at approximately $250,000 and is currently being facilitated through a loan. If this loan was not repaid immediately then the full funding of the $1,212,000 can be utilised for the merger process. Should some funding be left remaining at the conclusion of the process then this could be utilised to repay part or all of the loan. If not the loan would be left in place for the new entity to repay over its duration.

In response to the letters sent to the Minister and Department by the author, additional funding is being attempted to be sought from other sources to pay for physical assets that are required

to be purchased. These included the Office Administration Upgrade for $110,000 (included in the budget), Chamber extension $400,000, Records Management Storage $200,000, and depot extension $250,000. A response from the Minister is to come; however, please note that this was posted on the 9th September 2014.

Although the projects listed above, other than the office Administration Upgrade are not urgent but if funded would greatly reduce the future liabilities of the new entity. Also please note that again other than the Office Administration Upgrade the figures quoted are estimates and may be able to be facilitated much cheaper and were only quoted for discussion purposes.

The Business Plan for the merger has been previously presented to Council and the points contained within were negotiated and accepted by both Councils. As such, the remaining element is to endorse the funding offered by the state and commence the public consultation through providing this document again to the public and facilitate an advertised public meeting where the Town of Narrogin Rate Payers can advise Council as to their thoughts on the process or make written submissions to inform Council so that a final decision can be made.

It has been perceived that the Town of Narrogin will benefit from the merger at the cost of the Shire of Narrogin. It must be clearly stated that if the merger is to proceed the Town of Narrogin and the Shire of Narrogin will not remain and the new entity will benefit or will bear the cost from the merger being the Communities/Ratepayers of both the Town and Shire of Narrogin. If this argument was to be thought through the majority of the cost would be borne by the Town of Narrogin residents during the merging period whilst the Shire of Narrogin rates come up to parity during the 5 year agreed period.

The Town of Narrogin are presently left in a situation where it is waiting on the decision to be made by the Shire of Narrogin. However, it is proposed to Council to formalise its position so that should the Shire of Narrogin agree to progress forward the resolution is made to work with the funding committed and also to commence community consultation.

A meeting has been called by the Minister of Local Government to further discuss the projects that could be possibly be funded separately on the 25th September 2014. The Town has accepted this meeting request with the Mayor and CEO attending. The Shire of Narrogin is yet to confirm at the time of writing this report.

Consultation:

All Councillors and Shire of Councillors and CEO.

It is proposed that the consultation be facilitated through an advertising campaign with the information being provided on the Town's website, a public meeting to be held at the John Higgins Centre and concluding with the assessment of written submissions with all received information being assessed and summarised for Council to assess.

Statutory Environment: - Nil.

Policy Implications: - Nil

Financial Implications:

Currently the decision of Council presented at this meeting has no financial implications; however, moving forward past this point there may be financial implication from the lack of

funding from the state or other areas and the committing to expenses and the engagement of contractors and temporary staff. This matters will be raised with Council when required.

Strategic Implications:

This decision presented before Council is an important milestone decision and shows the commitment of the Town to the merger process.

Voting Requirements:

Simple Majority

Council Resolution 0914.135

Moved Cr Bartron **Seconded Cr Kain**

That Council:

Authorise the Chief Executive Officer to commence a consultation period with the Town of Narrogin Ratepayers and Residents to gain their feedback on the merger/boundary change of the Town and Shire of Narrogin as per the conditions outlined within the Business Plan Document for Council to assess, with the intention of committing to the process through the preparation of a letter to the Local Government Advisory Board requesting the two Councils merge.

CARRIED 6/0

10.2.348 ACCOUNTS FOR AUTHORISATION – AUGUST 2014

File Reference: 12.1.1
Disclosure of Interest: Nil
Applicant: Nil
Previous Item Nos: Nil
Date: 17/9/2014
Author: Aimie Allinson – Finance Officer

Attachments:

Accounts for Authorisation – August 2014

Background:

Pursuant to Section 6.8 (2)(b) of the *Local Government Act 1995*, where expenditure has been incurred by a local government it is to be reported to the next Ordinary Meeting of Council.

Comment:

The attached "Accounts for Authorisation – August 2014" is presented to Council for approval. Below is a summary of activity.

Total Creditor Payments August 2014	$775,934.55
Total Payroll Payments August 2014	$200,744.47
Total Payments August 2014	$976,679.02
Percentage paid by EFT August 2014	98.0%
Percentage paid by Cheque August 2014	2.0%
Percentage paid by Payroll August 2014	21.0%
Percentage of Local Suppliers and Payroll August 2014	43.6%
Dollar Value spent with Local Suppliers and Payroll August 2014	$426,471.59
Percentage of Non-Local Suppliers August 2014	56.4%

Please note 'F' is fully funded, 'P' is partially funded, 'R' is reimbursements and 'I' is insurance claims

Council Resolution 0914.136

Moved Cr Schutz **Seconded Cr Bartron**

That Council: Approve the Accounts for Authorisation for the month of August 2014,

For the Municipal Fund totalling $976,679.02

CARRIED 6/0

	ACCOUNTS FOR AUTHORISATION August 2014					
#	Chq/EFT	Date	Name	Description	Amount	Type
1	EFT2445	01/08/2014	Kinetic Super	Superannuation contributions	114.57	
2	EFT2446	01/08/2014	Concept One the Industry Superannuation Fund	Superannuation contributions	974.85	
3	EFT2447	01/08/2014	Hesta Superannuation	Superannuation contributions	933.62	
4	EFT2448	01/08/2014	Onepath Custodians Pty Ltd	Superannuation contributions	344.39	
5	EFT2449	01/08/2014	WA Local Government Super Plan	Superannuation contributions	31,178.47	
6	EFT2450	01/08/2014	AustralianSuper	Superannuation contributions	863.52	
7	EFT2451	01/08/2014	Host Plus	Superannuation contributions	467.11	
8	EFT2452	01/08/2014	Prime Super	Superannuation contributions	634.32	
9	EFT2453	01/08/2014	Department of Human Services	Payroll deductions	1,370.34	
10	EFT2454	01/08/2014	BT Lifetime Super	Superannuation contributions	689.63	
11	EFT2455	01/08/2014	Watchman Superannuation Fund	Superannuation contributions	543.26	
12	EFT2456	01/08/2014	Rearden Campbell Superannuation Fund	Superannuation contributions	527.88	
13	EFT2457	06/08/2014	Best Office Systems	ADMIN EQUIPMENT Folding Machine	7,843.00	
14	EFT2458	06/08/2014	Ray White Narrogin	REIMBURSEMENT DTES WATER 20 Forrest Street	71.80	
15	EFT2459	06/08/2014	Narrogin Electrical Appliance Testing	NHC DOMESTIC ASSISTANCE Neat Portable Appliance & RCD Testing. Invoice No. 195.	583.00	
16	EFT2460	06/08/2014	Narrogin Carpets & Curtains	TOWN HALL RENOVATION New Carpet for the Lesser Hall, Town Hall Upgrade Stage 3	15,675.00	F
17	EFT2461	06/08/2014	MAKIT Narrogin Hardware	NRLC MAINTENANCE Sanding paddle & bag of Compound	74.20	
18	EFT2462	06/08/2014	Landgate	TRANSPORT Topographical map showing elevation contours purpose of aiding Catchment Analysis	310.75	
19	EFT2463	06/08/2014	Susan Farrell	COUNCIL LAUNDRY Tea towels & Table Cloths	40.00	

20	EFT2464	06/08/2014	Anderson, Munro & Wyllie	ADMIN AUDIT Year Ending 30 June 2014	8,586.50	
21	EFT2465	06/08/2014	Narrogin Electrical Services	TOWN HALL RENOVATIONS Electrical Works to install light switchs to main hall, install 6 power points to sides of hall for decoration lighting.	6,221.95	F
22	EFT2466	06/08/2014	JR & A Hersey Pty Ltd	DEPOT Expendable tools for Depot.	416.10	
23	EFT2467	06/08/2014	PFD Food Services Pty Ltd	NRLC KIOSK STOCK FOR RESALE giant sausage rolls,billabong,milo, asst chips	251.45	
24	EFT2468	06/08/2014	P & F Kulker Building Contractors	DEPOT MAINTENANCE Hire Cherry Picker for Gutter Cleaning	146.30	
25	EFT2469	06/08/2014	CY O'Connor Institute	NHC CY O'Connor Cert. 3 Enzina Spouse REF-491759	241.64	F
26	EFT2470	06/08/2014	Country Paint Supplies	WASTE WATER Paint for Above Ground Effluent Pipe	49.01	
27	EFT2471	06/08/2014	Goodyear Dunlop Tyres Pty Ltd	NO592 HOLDEN Colorado puncture repair	30.00	
28	EFT2472	06/08/2014	The Distributors Perth	NRLC KIOSK STOCK FOR RESALE Lolly Order freddo frogs,snickers,mers ,kit-kat,twirl	434.60	
29	EFT2473	06/08/2014	Local Government Managers Australia	ADMIN TRAINING LGMA Introduction to Local Govt (Danita James)	429.00	
30	EFT2474	06/08/2014	Espresso Essential WA	NRLC COFFEE MACHINE SUPPLIES 1ctn milk,2choc,bag sticks,	219.50	
31	EFT2475	06/08/2014	Susan Guy	COMMUNITY GARDENS Fire Blankets	80.00	F
32	EFT2476	06/08/2014	Zipform Pty Ltd	SANITATION PRINTING Tip Passes 4 kinds (275 Shire Green Waste) (550 Shire General Waste) (3000 Town General Waste)	4,052.40	

				(3000 Town Green Waste) for year 2014-2015		
33	EFT2477	06/08/2014	Alchemy Technology	NHC Alchemy SMS Software Maintenance upgrade till 30 June 2015. Invoice No. 4767	2,710.40	
34	EFT2478	06/08/2014	Narrogin Chamber of Commerce	STAFF Gift Vouchers for Darryle Baxter	400.00	
35	EFT2479	06/08/2014	Bob Waddell Consultant	ADMIN CONSULTANTS Annual Budget assistance with preparation	2,706.00	
36	EFT2480	06/08/2014	J and S Kulker Painting	RAILWAY INSTITUTE HALL Internal painting of Building	3,278.00	F
37	EFT2481	06/08/2014	T Yuen Construction	NCP CARETAKER COTTAGE Preparation of plans and supervision of asbestos removal	800.00	
38	EFT2482	06/08/2014	Newdegate Netball Club	KIDS SPORT July Voucher x 4	220.00	F
39	EFT2483	06/08/2014	Melchiorre Plumbing & Gas	NCP REFURBISHMENT Labour to Disconnect water, sewer and reconnect water to house behind one being Demolished, Excavator Hire and Materials.	1,408.20	F
40	EFT2484	06/08/2014	The University of Western Australia	OTHER CULTURE Sponsorship 2014 students Irish option	3,300.00	
41	EFT2485	06/08/2014	Katanning Security Services Pty Ltd	NRLC Alarm Response,14/07/14 job NDi398	66.00	
42	EFT2486	06/08/2014	Narrogin Bargain Barn	LIBRARY EQUIPMENT Trolley for disc cleaning machine and cupboard for reserved books	495.00	
43	EFT2487	06/08/2014	PK Floor Sanding	NRLC JHCC Upgrade Floor	7,472.00	F
44	EFT2488	06/08/2014	Richard Reid	NCP MAINTENANCE Oil for Lawn Mower	11.40	

45	EFT2489	06/08/2014	Shelter Station WA PTY LTD	NHLP SHELTER DEPOSIT 50% Post Mounted Shelter	4,930.73	F
46	EFT2490	06/08/2014	Steelo's Guns And Outdoors	ANIMAL CONTROL Reloading Gear	96.10	
47	EFT2491	06/08/2014	Broad Electrical and Air Conditioning	NRLC MAINTENANCE Brackets for Speakers	1,072.60	
48	EFT2492	06/08/2014	Forpark Australia	LIONS PARK MAINTENANCE Replacement parts for Playground	837.08	
49	EFT2493	06/08/2014	Thecomputerschool.Net	LIBRARY IT Site Licence for the computer school technology training directory	1,512.50	
50	EFT2494	06/08/2014	Western Power Corporation	REFUND Western Power RENT Incorrectly Paid	572.00	R
51	EFT2495	06/08/2014	WA TYRE RECOVERY	REFUSE SITE MAINTENANCE Waste Tyre disposal - Removal of 360 passenger car/bike tyres and 79 other tyres	2,056.25	
52	EFT2496	06/08/2014	The Leighton Opus Team	ROAD MAINTENANCE Bulk Premix (9.4T) and Emulsion (3,600 litres) used for road maintenance during 2011	8,184.00	
53	EFT2497	12/08/2014	Leigh Ballard	SITTING FEE April - June 2014	10,024.98	
54	EFT2498	12/08/2014	David Arthur Russell	SITTING FEE April - June 2014	2,250.00	
55	EFT2499	12/08/2014	Arthur Reginald Paternoster	SITTING FEE April - June 2014	3,406.26	
56	EFT2500	12/08/2014	Jan Elizabeth McKenzie	SITTING FEE April - June 2014	2,250.00	
57	EFT2501	12/08/2014	Michael Gerard Kain	SITTING FEE April - June 2014	2,250.00	
58	EFT2502	12/08/2014	Paul Marcel Schutz	SITTING FEE April - June 2014	2,250.00	
59	EFT2503	12/08/2014	Colin John Ward	SITTING FEE April - June 2014	2,250.00	
60	EFT2504	12/08/2014	Clive Malcolm Bartron	SITTING FEE April - June 2014	2,250.00	
61	EFT2505	15/08/2014	Best Office Systems	WORKS DEPOT Printer Toner Cartridge	110.00	
62	EFT2506	15/08/2014	Narrogin Dependant Persons bus Association	HACC SOCIAL SUPPORT Shoppers Bus June 2014	453.75	F

63	EFT2507	15/08/2014	Narrogin Taxis	NHC TAXI Service June 2014	330.60	
64	EFT2508	15/08/2014	Narrogin Auto Electrics	1AEK763 Hino Road Sweeper New barrel for sweeper and alternater for sweeper	1,380.22	
65	EFT2509	15/08/2014	IT Vision	SANITATION IT Upload/Modify Rubbish Services	2,288.00	
66	EFT2510	15/08/2014	Narrogin Bearing Service	WORKS DEPOT Maintenance Air Compressor Fittings	58.30	
67	EFT2511	15/08/2014	CY O'Connor Institute	NHC TRAINING Cet III Aged Care Marika Harcourt	87.82	F
68	EFT2512	15/08/2014	Susan Guy	COMMUNITY GARDEN Reimbursement Fire Safety Equipment & Maintenance	72.60	
69	EFT2513	15/08/2014	LGIS WorkCare	NRLC INSURANCE LGIS PROPERTY Complex 2014/15	111,476.55	
70	EFT2514	15/08/2014	Jason Signmakers	NCP R4R Signage	313.50	
71	EFT2515	15/08/2014	Market Creations	COMMUNITY GARDEN Advertising Artwork Banners	572.00	F
72	EFT2516	15/08/2014	LGIS Insurance Broking	PUBLIC WORKS INSURANCE LIABILITY 2014/15	44,782.10	
73	EFT2517	15/08/2014	Community West	CHCP TRAINING Client Outcomes For L . Yorke & L O'dea	327.80	F
74	EFT2518	15/08/2014	Timothy Shepherdson	NHC REIMBURSEMENT Medical and License Fee	178.80	F
75	EFT2519	15/08/2014	Jeni Anning	ADMIN FINANCIAL Services July 2014	2,585.00	
76	EFT2520	15/08/2014	David Barrigton Coates	WORKS REIMBURSEMENT Training Expenses Meals & Refreshments	212.80	
77	EFT2521	15/08/2014	Stuart Edwards	REIMBURSEMENT CONSULT Fee Cheque Never Presented 2011	2,500.00	
78	EFT2522	25/08/2014	Knightline Computers	ADMIN Renew Symantec Antivirus Software	575.00	
79	EFT2523	25/08/2014	MAKIT Narrogin Hardware	NCP COTTAGE REFURBISH Polythene Sheeting	480.00	

				for Asbestos Removal		
80	EFT2524	25/08/2014	Narrogin Earthmoving & Concrete	PRIVATE WORKS Concrete for Western Power repairs on Grey st	12,163.80	
81	EFT2525	25/08/2014	WALGA	MEMBERS - WALGA Membership	33,396.54	
82	EFT2526	25/08/2014	Narrogin Meals On Wheels	NHC Narrogin Meals on Wheels Provision of 246 Meals delivered in July 2014	819.54	F
83	EFT2527	25/08/2014	Narrogin and District Senior Citizens Centre	NHC Narrogin & Districts Senior Citizen Centre Hire of Hall and Facilities in June 2014. Invoice No. 368	900.00	F
84	EFT2528	25/08/2014	Mechanical & Diesel Services	PLANT REPAIRS NGN11845 Toro Mower service	1,212.09	
85	EFT2530	25/08/2014	Ashley Blyth Tree Lopping	STREET TREES Tree pruning Fairway street	2,640.00	
86	EFT2531	25/08/2014	Melchiorre Plumbing & Gas	PUBLIC TOILETS Gnarojin Park repairs	380.78	
87	EFT2532	25/08/2014	Katanning Security Services Pty Ltd	TOWN HALL SECURITY call out 220714 & 240714	132.00	
88	EFT2534	25/08/2014	Global Synthetics Pty Ltd	PRIVATE WORKS Geofabric for drain works at Gray Street	1,320.00	
89	EFT2535	25/08/2014	Chuckem Farmstay B & B	MEMBERS Mayors Guests Accommodation & Meals	2,640.00	
90	EFT2536	27/08/2014	Annette Wiliiams	NRLC JHCC Bond Refund	275.00	
91	EFT2537	28/08/2014	Narrogin Hire & Reticulation	NCP REPAIRS Scaffold, saw concrete floor, hardware	549.15	
92	EFT2538	28/08/2014	Best Office Systems	ADMIN PHOTOCOPIER MPC6003 Colour Copies Copies	1,612.44	
93	EFT2539	28/08/2014	Wright express-(COLES)	TOWN OF NARROGIN July 2014	1,934.01	
94	EFT2540	28/08/2014	Narrogin Packaging	NRLC CLEANING Chux, lge toilet roll,cups handtowels.	1,148.92	
95	EFT2541	28/08/2014	Australia Post	ADMIN POSTAGE July 2014	3,002.06	

96	EFT2542	28/08/2014	Great Southern Fuels	TOWN OF NARROGIN FUEL July 2014	8,192.50	
97	EFT2543	28/08/2014	Narrogin Fruit Market	MEMBERS TRAINING CATERING	867.70	
98	EFT2544	28/08/2014	Narrogin Taxis	NHC Narrogin Taxi for client for Month July 2014, Invoice No. 43 - 48 less accounting fee $25	473.20	F
99	EFT2545	28/08/2014	St John Ambulance Assoc	NRLC MAINTENANCE First Aid Kit	128.30	
100	EFT2547	28/08/2014	Kleenheat Gas	NRLC BULK LPG	3,522.46	
101	EFT2548	28/08/2014	MAKIT Narrogin Hardware	PRIVATE WORKS HARDWARE MATERIALS Forply July 2014	2,847.10	
102	EFT2549	28/08/2014	Landgate	RATES Gross Rental Valuation Schedule No G2014/5	209.85	
103	EFT2550	28/08/2014	Coca-Cola Amatil (Aust) PTY LTD	NRRC KIOSK Stock for Resale 27 cartons	1,577.75	
104	EFT2551	28/08/2014	Arts Narrogin Inc	COMMUNIUTY CHEST Reimbursement	1,728.00	
105	EFT2552	28/08/2014	Narrogin Agricultural Repairs	WORKS Chainsaw Sharpener	380.00	
106	EFT2553	28/08/2014	Ballards of Narrogin	NCP GAS 45kg LPG Cylinder Camp Kitchen	147.00	
107	EFT2554	28/08/2014	Colin John Bastow	DCCS REIMBURSEMENT Electricity 28/5/14 24/7/14	683.00	
108	EFT2555	28/08/2014	IT Vision	RATES STATIONARY AMENDMENTS TO RATES SETTLEMENT STATEMENT - TO INCLUDE NEW SERVICE CODES	686.40	
109	EFT2556	28/08/2014	McLeods Barristers & Solicitors	LEGAL FEES YMCA Agreement Review	567.60	
110	EFT2557	28/08/2014	RJ Smith Engineering	ADMIN Water Supply x 6	96.00	
111	EFT2558	28/08/2014	CY O'Connor Institute	NHC TRAINING CERT II Operate and Maintain Chainsaw for Timothy.	116.52	F
112	EFT2559	28/08/2014	Country Paint Supplies	PUBLIC TOILETS GNAROJIN PARK	29.70	

				tile glue for Narrogin park toilet		
113	EFT2560	28/08/2014	The Distributors Perth	NRLC KIOSK Stock for Resale - Lollie order-13 ctns	919.70	
114	EFT2561	28/08/2014	Wormald	TOWN HALL MAINTENANCE Fire Safety Equipment	1,521.30	
115	EFT2562	28/08/2014	Pro-Met Express	NRLC FREIGHT Delivery from The Distributors	57.41	
116	EFT2563	28/08/2014	Narrogin Boilermakers	WORKS PPE HiVis 2 Tone Jacket	80.00	
117	EFT2564	28/08/2014	Alchemy Technology	NHC TRAINING Remote Training Fundamentals - Recurring and Services - Rosters 17/6/2014	104.50	F
118	EFT2565	28/08/2014	Bob Waddell Consultant	ADMIN CONSULTANT Assistance with new COA and July Monthly Financial Statements	2,640.00	
119	EFT2566	28/08/2014	Signs Plus	LIBRARY ADMIN Staff Name badges	117.00	
120	EFT2567	28/08/2014	Unique Signs & Engraving	TOWN OF NARROGIN Pens for Promotional purposes	220.00	
121	EFT2568	28/08/2014	Wickepin Ladies Hockey club	NRLC KIDSPORT VOUCHERS 2014 / 2015	225.00	F
122	EFT2569	28/08/2014	Dust & Tulle Dance School	NRLC KIDSPORT VOUCHERS 2014 /2015	1,000.00	F
123	EFT2570	28/08/2014	Dumbleyung Gymnastics Club	NRLC KIDSPORT VOUCHER 2014 /2015	3,200.00	F
124	EFT2571	28/08/2014	Hot Klobba Clothing Co	NHC STAFF UNIFORMS	86.90	F
125	EFT2572	28/08/2014	Melchiorre Plumbing & Gas	NRLC JHCC MAINTENANCE Repair Toilet	208.78	
126	EFT2573	28/08/2014	LGIS Insurance Broking	Various vehicle INSURANCE 2014/15	22,423.74	
127	EFT2574	28/08/2014	Brookton Pingelly Panthers Football Club	NRLC KIDSPORT VOUCHERS 2014/2015	65.00	
128	EFT2575	28/08/2014	Fortus	1CYQ644 CATERPILLAR Tyre Repairs	3,476.92	
129	EFT2576	28/08/2014	Initial Hygiene	MACKIE PARK PUBLIC TOILETS Hygiene Service (13 visits p.a)	389.03	

130	EFT2577	28/08/2014	GGJ Consultants	NHC GGJ Consultants Renewal of support Subscription for the GGJ Policies and Procedure Manual-expires 7/8/2015. Invoice no. 0055	385.00	F
131	EFT2578	28/08/2014	Community West	NHC Community West Registration for: Safe Transporting of people in buses, Cars & Vans for John, Mereana, Tim. Invoice no. 1933	577.50	F
132	EFT2579	28/08/2014	Narrogin Upholstery Service	00NGN MAINTENANCE Seat covers and floor mats	210.00	
133	EFT2580	28/08/2014	Avril Baxter	CG VOLUNTEER REIMBURSEMENT For Materials	113.40	
134	EFT2581	28/08/2014	West Australian Newspapers Limited	COMMUNITY GARDENS ADVERTISING Directory advertisement	5.70	F
135	EFT2582	28/08/2014	Narrogin Pumps Solar And Spraying	NRLC MAINTENANCE Testing solution 2	2.81	
136	EFT2583	28/08/2014	Global Synthetics Pty Ltd	PRIVATE WORKS MATERIALS Balance from Purchase 2072	132.00	
137	EFT2584	28/08/2014	Shelter Station WA PTY LTD	NHLP SHELTER Final Payment - Post Mounted Shelter 8m Wide x 14m long Total height is 5.36m	5,119.27	F
138	EFT2585	28/08/2014	Gnarojin Community Garden	COMMUNITY GARDEN REIMBURSEMENT Materials	59.00	
139	EFT2586	28/08/2014	Stoneham & Associates	NHLP POLICY Development of Health and Wellbeing Policy	2,200.00	F
	EFT2587	28/08/2014	Pingelly Junior Netball Club	NRLC KIDSPORT 2014/2015	1,035.00	F
140	EFT2588	28/08/2014	Ymca Of Perth Inc	NRLC CONSULTANCY Provision of Centre Manager 30/06/14 - 10/08/14	12,005.40	
141	EFT2589	28/08/2014	Maggie Signs & Decals	NARROGIN COMMUNITY GARDENS	404.00	F

				SIGNAGE - Aluminium sheet 2490 x256 with layout supplied		
142	EFT2590	28/08/2014	City of Joondalup	LIBRARY LOST & DAMAGED BOOK Cost Reclaim Library Bags	182.60	
143	EFT2591	28/08/2014	Quick Corporate Australia	ADMIN stationary AUGUST 2014	461.93	
144	EFT2592	28/08/2014	Perth Monumental Works	CEMETERY LGIS INSURANCE Repairs to damaged grave site	5,283.30	I
145	EFT2593	28/08/2014	Preview Plastics	LIBRARY MATERIALS Book Covers	215.60	
146	EFT2594	28/08/2014	City of Vincent	LIBRARY LOST & DAMAGED BOOKS Damaged inter library loan item True Blood 4th season DVD	52.80	
147	EFT2595	28/08/2014	Newdegate Junior Football Club	NRLC KIDSPORT VOUCHERS 2014 /2015	90.00	
148	EFT2596	28/08/2014	Edward Keith Crossley	COMMUNITY GARDEN VOLUNTEER Reimbursement	106.80	
149	EFT2597	28/08/2014	Market Creations	COMMUNITY GARDEN Promotional Banner Artwork	429.00	
150	EFT2598	28/08/2014	Marketforce	ADVERT in Observer Public Notices for Townscape Committee members	247.12	
151	EFT2599	28/08/2014	Aurora Environmental	TAFE Site Contamination Reporting Phase 2 DSI	15,145.26	
152	EFT2600	28/08/2014	PGV Environmental	TAFE Site Reserve 36090 & 35591 - Completion of Level 2 Flora and Fauna Survey of proposed Tafe Site	588.23	
153	EFT2601	29/08/2014	Narrogin Packaging	MACKIE PARK PUBLIC TOILETS Cleaning products	553.71	
154	EFT2602	29/08/2014	Courier Australia	1CYQ644 CATERPILLAR LOADER Tyres Freight	162.10	
155	EFT2603	29/08/2014	Commander Australia Ltd	NHC HACC Commander	387.76	F

				Network Charges 15/06/14 - 14/08/14		
156	EFT2604	29/08/2014	Great Southern Waste Disposal	Refuse Site Management Fees for period 30/6 to 28/7/2014	43,336.24	
157	EFT2605	29/08/2014	Narrogin Toyota	P38 SMALL PLANT Parts for Whipper Snipper	136.64	
158	EFT2606	29/08/2014	Farmworks Rural Pty Ltd	FOOTPATH WORKS Pallet of Cement for Verges	469.70	
159	EFT2607	29/08/2014	COTA WA	NHC HACC- Cota WA Org Membership Annual Fees July 2014-June 2015. Invoice No. 4719	65.00	F
160	EFT2608	29/08/2014	Nicholls Bus Service	NHC HACC Nicholls Bus- Hire of bus from Narrogin to Quindanning Invoice No. 764	200.00	F
161	EFT2609	29/08/2014	Livingstone International	NHC HACC Livingstone for gloves Invoice no. 6015310	294.75	F
162	EFT2610	29/08/2014	VisiMax Safety	ANIMAL CONTROL Dog Act Infringement Notices	321.75	
163	EFT2611	29/08/2014	Animal Care Equipment & Services (Australia) Pty Ltd	ANIMAL CONTROL Dog Handling Equipment - Dual Release Catchpole	383.70	
164	EFT2612	29/08/2014	Western Australia Police	NHC Western Australia Police Volunteer National check for Janine, Louise, Ross, Jim.	59.60	F
165	EFT2613	29/08/2014	Kinetic Super	Superannuation contributions	57.62	
166	EFT2614	29/08/2014	Concept One the Industry Superannuation Fund	Superannuation contributions	660.62	
167	EFT2615	29/08/2014	Hesta Superannuation	Superannuation contributions	628.88	
168	EFT2616	29/08/2014	Onepath Custodians Pty Ltd	Superannuation contributions	306.12	
169	EFT2617	29/08/2014	WA Local Government Super Plan	Superannuation contributions	19,784.85	
170	EFT2618	29/08/2014	Australian Super	Superannuation contributions	604.68	
171	EFT2619	29/08/2014	Host Plus	Superannuation contributions	224.89	
172	EFT2620	29/08/2014	Prime Super	Superannuation contributions	415.83	
173	EFT2621	29/08/2014	Department of Human Services	Payroll deductions	913.56	

174	EFT2622	29/08/2014	BT Lifetime Super	Superannuation contributions	438.46	
175	EFT2623	29/08/2014	Watchman Superannuation Fund	Superannuation contributions	365.38	
176	EFT2624	29/08/2014	Rearden Campbell Superanuation Fund	Superannuation contributions	358.46	
177	EFT2625	29/08/2014	Best Office Systems	ADMIN PHOTOCOPIER MPC6003 Colour Copies	831.45	
178	EFT2626	29/08/2014	Narrogin Fruit Market	COUNCIL MEETING Catering	70.00	
179	EFT2627	29/08/2014	Dynamic Print	BUILDING SURVEYOR TRAINEE X1000 Business Cards	199.00	
180	EFT2628	29/08/2014	St John Ambulance Assoc	NHC NRCP First aid course for Angela Davies	165.00	F
181	EFT2629	29/08/2014	E & H Staphorst	NGN 417 MITSUBISHI TRITION Ranger Vehicle 30,00km service	721.26	
182	EFT2630	29/08/2014	Knightline Computers	ADMIN MS UPGRADE Office 2013 Business	9,840.00	
183	EFT2631	29/08/2014	WALGA	MEMBERS CONFERENCE L Ballard	7,375.00	
184	EFT2632	29/08/2014	WA Rangers Association	ANIMAL CONTRO TRAINING Attendance fees for Guy Maley	570.00	
185	EFT2633	29/08/2014	Arts Narrogin Inc	REIMBURSEMENT TOWN HALL Hire	272.00	
186	EFT2634	29/08/2014	Brian Ronald Robinson	DTES REIMBURSEMENT Electricity	148.20	
187	EFT2635	29/08/2014	Narrogin Electrical Services	TOWN HALL UPGRADE Install CCTV	28,435.00	F
188	EFT2636	29/08/2014	Liquor Barons	COUNCIL REFRESHMENT	217.96	
189	EFT2637	29/08/2014	McLeods Barristers & Solicitors	RATES DEBT Collection	386.40	
190	EFT2638	29/08/2014	Baileys Fertilisers	CLAYTON RD OVAL Maintenance Fertiliser - 3 x 400kg bags of growsorb	7,637.85	
191	EFT2639	29/08/2014	TJ & EA Lynch	NCP MAINTENANCE Service Washing Machines	80.00	
192	EFT2640	29/08/2014	Public Transport Authority	TRANSWA TICKET Sale July 2014	763.32	PRB
193	EFT2641	29/08/2014	Derbahl Pty Ltd	NRLC JHCC MAINTENANCE	175.00	

				Pumping Grease Trap		
194	EFT2642	29/08/2014	Narrogin Boilermakers	WORKS PPE Jackets for works crew	330.00	
195	EFT2643	29/08/2014	Melchiorre Plumbing & Gas	NRLC GENERAL MAINTENANCE Check Water flow Wetside Showers	99.00	
196	EFT2644	29/08/2014	Fortus	NO4141 JOHN DEERE FEL Pats Lock Pin & Tooth	231.70	
197	EFT2645	29/08/2014	Crevet Pipelines	WWTP MATERIALS Plumbing Fittings	258.53	
198	EFT2646	29/08/2014	Covs Parts Pty Ltd	WORKS PLANT REPAIRS New side view mirror for tipper ute	38.24	
199	EFT2647	29/08/2014	Ballard Seeds	ANIMAL POUND Sustenance for Dogs	30.00	
200	EFT2648	29/08/2014	Quick Corporate Australia	TOWN OF NARROGIN Stationery August 2014	1,017.28	
201	EFT2649	29/08/2014	Environmental Health Australia (WA)	EHO TRAINING 25/08/14 -26/08/14	725.00	
202	DD567.2	01/08/2014	Synergy	ELECTRICITY AUGUST 2014	18,177.65	
203	DD590.1	04/08/2014	Water Corporation	WATER AUGUST 2014	155.16	
204	DD590.2	19/08/2014	Synergy	ELECTRICITY AUGUST 2014	26,150.40	
205	DD594.1	31/08/2014	RAC Businesswise	NHC INSURANCE 2014/2015	182.00	F
206	DD598.1	29/08/2014	Australian Taxation Office	BASS JULY 2014	88,588.00	
207	45067	01/08/2014	Australian Ethical Superannuation	Superannuation contributions	977.89	
208	45068	01/08/2014	Commonwealth Bank	Superannuation contributions	804.03	
209	45069	01/08/2014	MLC Nominees	Superannuation contributions	508.50	
210	45070	01/08/2014	QANTAS Staff Credit Union Limited	Superannuation contributions	393.15	
211	45071	01/08/2014	St Andrews Retirement Plan	Superannuation contributions	132.24	
212	45072	01/08/2014	Colonial First State Investments	Superannuation contributions	66.55	
213	45073	01/08/2014	AMP Life Limited	Superannuation contributions	187.41	
214	45074	01/08/2014	Telstra Super Pty Ltd	Superannuation contributions	493.26	
215	45075	06/08/2014	City of Gosnells	LIBRARY LOST AND DAMAGED BOOKS Wild Child DVD	14.00	
216	45076	12/08/2014	Town Of Narrogin	ADMIN TILL FLOAT Lunch till	250.00	

217	45079	15/08/2014	Parrys Pty Ltd	WORKS PPE Work Boots	1,210.91	
218	45080	15/08/2014	Lyn Gannaway	REFUND BOND 21/7/14	275.00	
219	45081	19/08/2014	Town Of Narrogin	REIMBURSEMENT GIFT Vouchers M Mcauliffe	300.00	
220	45082	28/08/2014	Telstra	ADMIN LANDLINE JULY 2014	2,493.95	
221	45083	28/08/2014	Narrogin Toyota	SMALL PLANT Repairs to Chainsaw New Chain & Wrench	106.81	
222	45084	28/08/2014	Narrogin Hawks Football Club	NRLC KIDSPORT VOCHERS 2014 /2015	1,485.00	F
223	45085	28/08/2014	Mister Yardman	NRRC - asked for 6 months only exp on 31/12/14-	275.00	
224	45086	29/08/2014	Department of Mines & Petroleum	TWIS System - Annual fee for Department of Mines & Petroleum License	192.00	
225	45087	29/08/2014	Australian Ethical Superannuation	Superannuation contributions	672.30	
226	45088	29/08/2014	Commonwealth Bank	Superannuation contributions	540.76	
227	45089	29/08/2014	MLC Nominees	Superannuation contributions	342.00	
228	45090	29/08/2014	QANTAS Staff Credit Union Limited	Superannuation contributions	266.52	
229	45091	29/08/2014	St Andrews Retirement Plan	Superannuation contributions	73.35	
230	45092	29/08/2014	Colonial First State Investments	Superannuation contributions	125.15	
231	45093	29/08/2014	AMP Life Limited	Superannuation contributions	118.94	
232	45094	29/08/2014	Telstra Super Pty Ltd	Superannuation contributions	332.12	
233	45095	29/08/2014	Allans Bobcat and Truck Hire	CEMETERY MAINTENANCE Grave Digs	1,210.00	
234	45096	29/08/2014	Westfarmers Landmark	WORKS PPE Gum Boots x 2 Pairs	99.00	
235	45097	29/08/2014	A & A Corasaniti Building Contractors Pty Ltd	ADMIN Renovate Front Entry and add wall to photocopier room as per quote 16	5,798.40	F
236	45098	29/08/2014	Kulker Auto Specialist	NGN93 2013 MITSUBISHI UTE Service	333.70	
					20,077.94	
Payroll Date	Nett Paid					
5/8/2014	$1,902.72					

13/5/2014	$99,691.55			Cheque Total	$ 20,077.94	2%
27/08/2014	$99,150.20			EFT Total	$755,856.61	98%
TOTAL	$200,744.47			Payroll Total	$200,744.47	21%
F	Funded			TOTAL	$976,679.02	
R	Reimbursement					
I	Insurance			Local Suppliers	221,369.02	23%
PRB	Partially reimbursement			Employees	200,744.47	21%

10.2.349 MONTHLY FINANCIAL REPORTS – AUGUST 2014

File Reference: **12.8.1**
Disclosure of Interest: **Nil**
Applicant: **Nil**
Previous Item Nos: **Nil**
Date: **18 September 2014**
Author: **Jeni Anning**

Attachments:

Monthly Financial Report for the period ended 31 August 2014.

Summary:

In accordance with Regulation 34 of the Local Government (Financial Management) Regulations 1996, the Town is to prepare a monthly Statement of Financial Activity for approval by Council.

Comment:

The Monthly Financial Statements for the Month of August have been prepared in order to provide actual comparisons for the purpose of adopting the 2014/15 Budget. These financial statements have not been audited therefore are not the final end of year statements. The 2013/14 Annual Financial Report will be presented at a later date.

Consultation:

Colin Bastow, Director of Corporate and Community Services

Statutory Environment:

Local Government Financial Regulations (1996) (as amended) 22, 32, and 34 apply.

Policy Implications: - Nil

Financial Implications:

All expenditure has been approved via adoption of the 2013/14 Annual Budget, or resulting from a Council Motion for a budget amendment.

Strategic Implications: - Nil

Voting Requirements: - Simple Majority

Council Resolution 0914.137

Moved Cr Russell **Seconded Cr McKenzie**

That Council

Receive the August 2014 Monthly Financial Reports as presented.

CARRIED 6/0

MONTHLY FINANCIAL REPORT

FOR THE PERIOD ENDED 31 AUGUST 2014

TABLE OF CONTENTS

Statement of Financial Activity		
Note 1	Significant Accounting Policies	
Note 2	Graphical Representation	Currently not available
Note 3	Surplus/(Deficit) Position	
Note 4	Cash and Investments	
Note 5	Major Variances	
Note 6	Budget Amendments	
Note 7	Receivables	
Note 8	Rating Information	Currently not available
Note 9	Grants	Currently not available
Note 10	Cash Backed Reserves	
Note 11	Capital Disposals and Acquisitions	
Note 12	Trust	
Note 13	Information on Borrowings	

LOCAL GOVERNMENT ACT 1995
LOCAL GOVERNMENT (FINANCIAL MANAGEMENT) REGULATIONS 1996

TOWN OF NARROGIN
STATEMENT OF FINANCIAL ACTIVITY
(Nature or Type)
FOR THE PERIOD ENDED 31 AUGUST 2014

	Note	Adopted Annual Budget	Revised Annual Budget 4	YTD Budget (a)	YTD Actual (b)	Var. $ (b)-(a) 3	Var. % (b)-(a)/(b) 300%	
Operating Revenues		$	$	$	$	$	%	
Grants, Subsidies and Contributions	8	2,861,468	2,861,468	572,396	623,701	51,305	8%	
Profit on Asset Disposal	10	19,340	19,340	3,222	0	(3,222)	(100%)	
Fees and Charges		1,380,518	1,380,518	811,052	921,003	109,951	12%	▲
Service Charges		0	0	0	0	0		
Interest Earnings		96,300	96,300	14,214	7,409	(6,805)	(92%)	
Other Revenue		105,000	105,000	17,498	25,116	7,618	30%	
Total (Excluding Rates)		**4,462,626**	**4,462,626**	**1,418,382**	**1,577,229**	**158,847**		
Operating Expense								
Employee Costs		(3,724,892)	(3,724,892)	(639,321)	(641,813)	(2,492)	(0%)	
Materials and Contracts		(3,115,874)	(3,115,874)	(535,187)	(297,253)	237,934	80%	▼
Utilities Charges		(738,110)	(738,110)	(134,541)	(87,288)	47,253	54%	▼
Depreciation (Non-Current Assets)		(1,324,892)	(1,324,892)	(220,804)	0	220,804	100%	▼
Interest Expenses	12	(50,796)	(50,796)	(8,460)	(4,076)	4,384	108%	
Insurance Expenses		(194,494)	(194,494)	(95,415)	(112,816)	(17,401)	(15%)	
Loss on Asset Disposal	10	(40,686)	(40,686)	(6,776)	0	6,776	100%	
Other Expenditure		(267,030)	(267,030)	(69,893)	(19,778)	50,115	253%	▼
Total		**(9,456,774)**	**(9,456,774)**	**(1,710,397)**	**(1,163,025)**	**547,372**		
Funding Balance Adjustment								
Add Back Depreciation		1,324,892	1,324,892	220,804	0	(220,804)	(100%)	▼
Adjust (Profit)/Loss on Asset Disposal	10	21,346	21,346	3,554	0	(3,554)	(100%)	
Adjust Employee Benefits Provision (Non-Current)		0	0	0	0	0		
Adjust Deferred Pensioner Rates (Non-Current)		0	0	0	0	0		
Movement in Leave Reserve (Added Back)		0	0	0	115	115	100%	
Adjust Rounding		0	0	0	0	0		
Net Operating (Ex. Rates)		**(3,647,910)**	**(3,647,910)**	**(67,657)**	**414,320**	**481,977**		
Capital Revenues								
Grants, Subsidies and Contributions	8	217,194	217,194	36,198	0	(36,198)	(100%)	▼
Proceeds from Disposal of Assets	10	228,600	228,600	38,092	26,573	(11,519)	(43%)	
Proceeds from New Debentures	12	0	0	0	0	0		
Proceeds from Sale of Investments		0	0	0	0	0		
Proceeds from Advances		0	0	0	0	0		
Self-Supporting Loan Principal		0	0	0	0	0		
Transfer from Reserves	9	1,132,231	1,132,231	188,696	0	(188,696)	(100%)	▼
Total		**1,578,025**	**1,578,025**	**262,986**	**26,573**	**(236,413)**		
Capital Expenses								
Land Held for Resale	10	0	0	0	0	0		
Land and Buildings	10	(428,050)	(428,050)	(71,330)	(62,697)	8,633	14%	
Plant and Equipment	10	(668,302)	(668,302)	(111,376)	0	111,376	100%	▼
Furniture and Equipment	10	(45,650)	(45,650)	(7,606)	(7,130)	476	7%	
Infrastructure Assets - Roads	10	(369,919)	(369,919)	(61,648)	0	61,648	100%	▼
Infrastructure Assets - Footpaths	10	(71,790)	(71,790)	(11,964)	0	11,964	100%	
Infrastructure Assets - Drainage	10	(41,500)	(41,500)	(6,916)	0	6,916	100%	
Infrastructure Assets - Parks & Ovals	10	0	0	0	0	0		
Infrastructure Assets - Townscape	10	0	0	0	0	0		
Infrastructure Assets - Other	10	(202,030)	(202,030)	(33,662)	(13,126)	20,536	156%	
Purchase of Investments		0	0	0	0	0		
Repayment of Debentures	12	(138,357)	(138,357)	(23,056)	(6,336)	16,720	264%	
Advances to Community Groups		0	0	0	0	0		
Transfer to Reserves	9	(199,221)	(199,221)	(33,196)	(1,393)	31,803	2283%	▼
Total		**(2,164,819)**	**(2,164,819)**	**(360,754)**	**(90,682)**	**270,072**		
Net Capital		**(586,794)**	**(586,794)**	**(97,768)**	**(64,109)**	**33,659**		
Total Net Operating + Capital		**(4,234,704)**	**(4,234,704)**	**(165,425)**	**350,211**	**515,636**		
Rate Revenue		3,184,313	3,184,313	3,183,063	3,182,468	(595)	(0%)	
Opening Funding Surplus(Deficit)		1,055,431	1,089,912	1,089,912	1,089,912	0	0%	
Closing Funding Surplus(Deficit)	3	**5,040**	**39,521**	**4,107,550**	**4,622,590**	**515,040**		

TOWN OF NARROGIN
STATEMENT OF FINANCIAL ACTIVITY
(Statutory Reporting Program)
FOR THE PERIOD ENDED 31 AUGUST 2014

	Note	Adopted Annual Budget	Revised Annual Budget 4	YTD Budget (a)	YTD Actual (b)	Var. $ (b)-(a) 3	Var. % (b)-(a)/(b) 300%	Var
Operating Revenues		$	$	$	$	$	%	
Governance		6,200	6,200	198	1,256	1,058	84%	
General Purpose Funding		1,386,813	1,386,813	332,306	330,387	(1,919)	(1%)	
Law, Order and Public Safety		30,700	30,700	2,858	2,712	(146)	(5%)	
Health		8,750	8,750	4,164	3,027	(1,137)	(38%)	
Education and Welfare		1,447,107	1,447,107	246,631	300,770	54,139	18%	▲
Housing		7,800	7,800	1,300	1,500	200	13%	
Community Amenities		878,745	878,745	721,457	761,765	40,308	5%	
Recreation and Culture		300,253	300,253	43,432	87,800	44,368	51%	▲
Transport		332,194	332,194	55,362	24,986	(30,376)	(122%)	▼
Economic Services		214,617	214,617	35,764	56,516	20,752	37%	
Other Property and Services		66,641	66,641	11,106	6,511	(4,595)	(71%)	
Total (Excluding Rates)		**4,679,820**	**4,679,820**	**1,454,578**	**1,577,229**	**122,651**		
Operating Expense								
Governance		(967,382)	(967,382)	(196,226)	(100,008)	96,218	96%	▼
General Purpose Funding		(167,592)	(167,592)	(30,038)	(23,451)	6,587	28%	
Law, Order and Public Safety		(238,488)	(238,488)	(46,888)	(37,224)	9,664	26%	
Health		(97,655)	(97,655)	(17,578)	(12,287)	5,291	43%	
Education and Welfare		(1,539,998)	(1,539,998)	(271,865)	(162,292)	109,573	68%	▼
Housing		0	0	(706)	(2,171)	(1,465)	(67%)	
Community Amenities		(1,083,881)	(1,083,881)	(184,880)	(137,855)	47,025	34%	▼
Recreation and Culture		(2,784,637)	(2,784,637)	(502,577)	(336,377)	166,200	49%	▼
Transport		(1,443,439)	(1,443,439)	(242,445)	(97,484)	144,961	149%	▼
Economic Services		(1,076,848)	(1,076,848)	(185,259)	(89,382)	95,877	107%	▼
Other Property and Services		(56,854)	(56,854)	(31,935)	(164,493)	(132,558)	(81%)	▲
Total		**(9,456,774)**	**(9,456,774)**	**(1,710,397)**	**(1,163,025)**	**547,372**		
Funding Balance Adjustment								
Add back Depreciation		1,324,892	1,324,892	220,804	0	(220,804)	(100%)	▼
Adjust (Profit)/Loss on Asset Disposal	10	21,346	21,346	3,554	0	(3,554)	(100%)	
Adjust Employee Benefits Provision (Non-Current)		0	0	0	0	0		
Adjust Deferred Pensioner Rates (Non-Current)		0	0	0	0	0		
Movement in Leave Reserve (Added Back)		0	0	0	115	115	100%	
Adjust Rounding		0	0	0	1	1	100%	
Net Operating (Ex. Rates)		**(3,430,716)**	**(3,430,716)**	**(31,461)**	**414,321**	**445,782**		
Capital Revenues								
Proceeds from Disposal of Assets	10	228,600	228,600	38,092	26,573	(11,519)	(43%)	
Proceeds from New Debentures	12	0	0	0	0	0		
Proceeds from Sale of Investments		0	0	0	0	0		
Proceeds from Advances		0	0	0	0	0		
Self-Supporting Loan Principal		0	0	0	0	0		
Transfer from Reserves	9	1,132,231	1,132,231	188,696	0	(188,696)	(100%)	▼
Total		**1,360,831**	**1,360,831**	**226,788**	**26,573**	**(200,215)**		
Capital Expenses								
Land Held for Resale	10	0	0	0	0	0		
Land and Buildings	10	(428,050)	(428,050)	(71,330)	(62,697)	8,633	14%	
Plant and Equipment	10	(668,302)	(668,302)	(111,376)	0	111,376	100%	▼
Tools	10	0	0	0	0	0		
Furniture and Equipment	10	(45,650)	(45,650)	(7,606)	(7,130)	476	7%	
Infrastructure Assets - Roads	10	(369,919)	(369,919)	(61,648)	0	61,648	100%	▼
Infrastructure Assets - Footpaths	10	(71,790)	(71,790)	(11,964)	0	11,964	100%	
Infrastructure Assets - Drainage	10	(41,500)	(41,500)	(6,916)	0	6,916	100%	
Infrastructure Assets - Parks & Ovals	10	0	0	0	0	0		
Infrastructure Assets - Townscape	10	0	0	0	0	0		
Infrastructure Assets - Other	10	(202,030)	(202,030)	(33,662)	(13,126)	20,536	156%	
Purchase of Investments		0	0	0	0	0		
Repayment of Debentures	12	(138,357)	(138,357)	(23,056)	(6,336)	16,720	264%	
Advances to Community Groups		0	0	0	0	0		
Transfer to Reserves	9	(199,221)	(199,221)	(33,196)	(1,393)	31,803	2283%	▼
Total		**(2,164,819)**	**(2,164,819)**	**(360,754)**	**(90,682)**	**270,072**		
Net Capital		**(803,988)**	**(803,988)**	**(133,966)**	**(64,109)**	**69,857**		
Total Net Operating + Capital		**(4,234,704)**	**(4,234,704)**	**(165,427)**	**350,212**	**515,639**		
Rate Revenue		3,184,313	3,184,313	3,183,063	**3,182,468**	(595)	(0%)	
Opening Funding Surplus(Deficit)		1,055,431	1,089,912	1,089,912	**1,089,912**	0	0%	
Closing Funding Surplus(Deficit)	3	**5,040**	**39,521**	**4,107,548**	**4,622,591**	**515,043**		

TOWN OF NARROGIN
NOTES TO THE STATEMENT OF FINANCIAL ACTIVITY
FOR THE PERIOD ENDED 31 AUGUST 2014

1. SIGNIFICANT ACCOUNTING POLICIES

financial activity are:

(a) Basis of Accounting
This statement is a special purpose financial report, prepared in accordance with applicable Australian Australian Accounting Standards, other mandatory professional reporting requirements and the Local Government Act 1995 (as amended) and accompanying regulations (as amended).

(b) The Local Government Reporting Entity
All Funds through which the Council controls resources to carry on its functions have been included in this statement.

In the process of reporting on the local government as a single unit, all transactions and balances between those funds (for example, loans and transfers between Funds) have been eliminated.

All monies held in the Trust Fund are excluded from the statement, but a separate statement of those monies appears at Note 12.

(c) Rounding Off Figures
All figures shown in this statement are rounded to the nearest dollar.

(d) Rates, Grants, Donations and Other Contributions
Rates, grants, donations and other contributions are recognised as revenues when the local government obtains control over the assets comprising the contributions. Control over assets acquired from rates is obtained at the commencement of the rating period or, where earlier, upon receipt of the rates.

(e) Goods and Services Tax
In accordance with recommended practice, revenues, expenses and assets capitalised are stated net of any GST recoverable. Receivables and payables are stated inclusive of applicable GST.

(f) Cash and Cash Equivalents
Cash and cash equivalents comprise cash at bank and in hand and short-term deposits that are readily convertible to known amounts of cash and which are subject to an insignificant risk of changes in value.

For the purposes of the Cash Flow Statement, cash and cash equivalents consist of cash and cash equivalents as defined above, net of outstanding bank overdrafts. Bank overdrafts are included as short-term borrowings in current liabilities.

(g) Trade and Other Receivables
Trade receivables, which generally have 30 - 90 day terms, are recognised initially at fair value and subsequently measured at amortised cost using the effective interest rate method, less any allowance for uncollectible amounts.

Collectability of trade receivables is reviewed on an ongoing basis. Debts that are known to be uncollectible are written off when identified. An allowance for doubtful debts is raised when there is objective evidence that they will not be collectible.

(h) Inventories
General
Inventories are valued at the lower of cost and net realisable value. Net realisable value is the estimated selling price in the ordinary course of business less the estimated costs of completion and the estimated costs of necessary to make the sale.

Inventories held from trading are classified as current even if not expected to be realised in the next 12 months.

1. SIGNIFICANT ACCOUNTING POLICIES (Continued)

Land Held for Resale
Land purchased for development and/or resale is valued at the lower of the cost and net realisable value. Cost includes the cost of acquisition, development and interest incurred on the financing of that land during its development. Interest and holding charges incurred after development is complete are recognised as expenses.

Revenue arising from the sale of property is recognised in the operating statement as at the time of signing a binding contract of sale.

Land held for resale is classified as current except where it is held as non-current based on Council's intentions to release for sale.

(i) Fixed Assets
All assets are initially recognised at cost. Cost is determined as the fair value of the assets given as consideration plus costs incidental to the acquisition. For assets acquired at no cost or for nominal consideration, cost is determined as fair value at the date of acquisition. The cost of non-current assets constructed by the local government includes the cost of all materials used in the construction, direct labour on the project and an appropriate proportion of variable and fixed overhead.

Certain asset classes may be revalued on a regular basis such that the carrying values are not materially different from fair value. Assets carried at fair value are to be revalued with sufficient regularity to ensure the carrying amount does not differ materially from that determined using fair value at reporting date.

(j) Depreciation of Non-Current Assets
All non-current assets having a limited useful life are systematically depreciated over their useful lives in a manner which reflects the consumption of the future economic benefits embodied in those assets.

Depreciation is recognised on a straight-line basis, using rates which are reviewed each reporting period. Major depreciation rates and periods are:

Buildings	50 to 100 years
Furniture and Equipment	10 years
Plant and Equipment	5 to 15 years
Sealed roads and streets	
clearing and earthworks	not depreciated
construction/road base	50 years
original surfacing and major re-surfacing	
- bituminous seals	20 years
Gravel roads	
clearing and earthworks	not depreciated
construction/road base	50 years
gravel sheet	12 years
Formed roads (unsealed)	
clearing and earthworks	not depreciated
construction/road base	50 years
Footpaths - slab	40 years

Capitalisation Threshold
Plant, Property and Equipment (excluding Buildings) items to $5,000 or greater, and Building and Infrastructure items to $10,000 or greater.

1. SIGNIFICANT ACCOUNTING POLICIES (Continued)

(k) Trade and Other Payables

provided to the local government prior to the end of the financial year that are unpaid and arise when the Shire becomes obliged to make future payments in respect of the purchase of these goods and services. The amounts are unsecured and are usually paid within 30 days of recognition.

(l) Employee Benefits

The provisions for employee benefits relates to amounts expected to be paid for long service leave,

(i) Wages, Salaries, Annual Leave and Long Service Leave (Short-term Benefits)
be settled within 12 months represents the amount the Shire has a present obligation to pay resulting from employees services provided to balance date. The provision has been calculated at nominal amounts based on remuneration rates the Shire expects to pay and includes related on-costs.

(ii) Annual Leave and Long Service Leave (Long-term Benefits)
The liability for long service leave is recognised in the provision for employee benefits and measured as the the reporting date using the project unit credit method. Consideration is given to expected future wage and salary levels, experience of employee departures and periods of service. Expected future payments are discounted using market yields at the reporting date on national government bonds with terms to maturity and currency that match as closely as possible, the estimated future cash outflows. Where the Shire does not have the unconditional right to defer settlement beyond 12 months, the liability is recognised as a current liability.

(m) Interest-bearing Loans and Borrowings

All loans and borrowings are initially recognised at the fair value of the consideration received less directly attributable transaction costs.

After initial recognition, interest-bearing loans and borrowings are subsequently measured at amortised cost using the effective interest method. Fees paid on the establishment of loan facilities that are yield related are included as part of the carrying amount of the loans and borrowings.

(n) Borrowing Costs

Borrowing costs are recognised as an expense when incurred except where they are directly attributable capitalised as part of the cost of the particular asset.

Provisions are recognised when: The council has a present legal or constructive obligation as a result of past events; it is more likely than not that an outflow of resources will be required to settle the obligation; and the amount has been reliably estimated. Provisions are not recognised for future operating losses. is determined by considering the class of obligations as a whole. A provision is recognised even if the likelihood of an outflow with respect to any one of item included in the same class of obligations may be small.

(o) Current and Non-Current Classification

In the determination of whether an asset or liability is current or non-current, consideration is given to the time when each asset or liability is expected to be settled. The asset or liability is classified as current if it is expected to be settled within the next 12 months, being the Council's operational cycle. In the case of liabilities where Council does not have the unconditional right to defer settlement beyond 12 months, such as vested long service leave, the liability is classified as current even if not expected to be settled within the next 12 months. Inventories held for trading are classified as current even if not expected to be realised in the next 12 months except for land held for resale where it is held as non current based on Council's intentions to release for sale.

(p) Nature or Type Classifications

Rates

All rates levied under the Local Government Act 1995. Includes general, differential, specific area rates, minimum rates, interim rates, back rates, ex-gratia rates, less discounts offered. Exclude administration fees, interest on instalments, interest on arrears, service charges and sewerage rates.

Operating Grants, Subsidies and Contributions

Refer to all amounts received as grants, subsidies and contributions that are not non-operating grants.

1. SIGNIFICANT ACCOUNTING POLICIES (Continued)

(p) Nature or Type Classifications (Continued)

Non-Operating Grants, Subsidies and Contributions
Amounts received specifically for the acquisition, construction of new or the upgrading of non-current assets paid to a local government, irrespective of whether these amounts are received as capital grants, subsidies, contributions or donations.

Profit on Asset Disposal
Profit on the disposal of assets including gains on the disposal of long term investments.
Losses are disclosed under the expenditure classifications.

Fees and Charges
Revenues (other than service charges) from the use of facilities and charges made for local government services, sewerage rates, rentals, hire charges, fee for service, photocopying charges, licences, sale of goods or information, fines, penalties and administration fees. Local governments may wish to disclose more detail such as rubbish collection fees, rental of property, fines and penalties, other fees and charges.

Service Charges
Service charges imposed under Division 6 of Part 6 of the Local Government Act 1995. Regulation 54 of the Local Government (Financial Management) Regulations 1996 identifies these are television and radio broadcasting, underground electricity and neighbourhood surveillance services. Exclude rubbish removal charges. Interest and other items of a similar nature received from bank and investment accounts, interest on rate instalments, interest on rate arrears and interest on debtors.

Interest Earnings
Interest and other items of a similar nature received from bank and investment accounts, interest on rate instalments, interest on rate arrears and interest on debtors.

Other Revenue / Income
Other revenue, which can not be classified under the above headings, includes dividends, discounts, rebates etc.

Employee Costs
All costs associate with the employment of person such as salaries, wages, allowances, benefits such as vehicle and housing, superannuation, employment expenses, removal expenses, relocation expenses, worker's compensation insurance, training costs, conferences, safety expenses, medical examinations, fringe benefit tax, etc.

Materials and Contracts
All expenditures on materials, supplies and contracts not classified under other headings. These include supply of goods and materials, legal expenses, consultancy, maintenance agreements, communication expenses, advertising expenses, membership, periodicals, publications, hire expenses, rental, leases, postage and freight etc. Local governments may wish to disclose more detail such as contract services, consultancy, information technology, rental or lease expenditures.

Utilities (Gas, Electricity, Water, etc.)
Expenditures made to the respective agencies for the provision of power, gas or water. Exclude expenditures incurred for the reinstatement of roadwork on behalf of these agencies.

Insurance
All insurance other than worker's compensation and health benefit insurance included as a cost of employment.

Loss on asset disposal
Loss on the disposal of fixed assets.

Depreciation on non-current assets
Depreciation expense raised on all classes of assets.

1. SIGNIFICANT ACCOUNTING POLICIES (Continued)

(p) Nature or Type Classifications (Continued)

Interest expenses
Interest and other costs of finance paid, including costs of finance for loan debentures, overdraft accommodation and refinancing expenses.

Other expenditure
Statutory fees, taxes, provision for bad debts, member's fees or levies including WA Fire Brigade Levy and State taxes. Donations and subsidies made to community groups.

(q) Statement of Objectives

In order to discharge its responsibilities to the community, the Council has developed a set of operational and financial objectives. These objectives have been established both on an overall basis and for each of its broad activities/programs.

Council operations as disclosed in this statement encompass the following service orientated activities/programs:

GOVERNANCE
Members of Council, Civic Functions, Executive Support, Human Resources & Payroll, Security Services, Administration Support, Records Management, Information Technology and Financial Control.

GENERAL PURPOSE FUNDING
All Rate Revenue and Penalties, General Purpose Grant, Pensioners Deferred Rates Grant and Interest Revenue.

LAW, ORDER, PUBLIC SAFETY
Fire Prevention, Animal Control, General Ranger Services, Emergency Services.

HEALTH
Maternal and Infant Health, Preventative Services (Immunisation), Inspections, Pest Control.

HOUSING
The Town does not have any staff or other residential housing.

COMMUNITY AMENITIES
Sanitation Household Refuse, Refuse Site, Sewerage, Protection of the Environment, Town Planning, Cemeteries, Bus Shelters.

RECREATION AND CULTURE
Public Halls and Civic Centres, Aquatic Centre, Beaches, Recreation Grounds (Active and Passive), Arts, Leisure Development, Libraries, Museum, Arts Centre.

TRANSPORT
Road Maintenance, Footpaths, Bridges, Street Trees, Street Lighting, Cycle ways, Vehicle Crossovers, Depots, Parking.

ECONOMIC SERVICES
Rural Services, Tourism, Building Control, Economic Development.

OTHER PROPERTY & SERVICES
Private Works, Stocks and Miscellaneous Items.

TOWN OF NARROGIN
NOTES TO THE STATEMENT OF FINANCIAL ACTIVITY
FOR THE PERIOD ENDED 31 AUGUST 2014

Note 3: SURPLUS/(DEFICIT) POSITION

		Positive=Surplus (Negative=Deficit)		
		31/08/2014	31/07/2014	31/08/2013
	Note	This Period	Last Period	Same Period Last Year
		$	$	$
Current Assets				
Cash Unrestricted		**2,282,325**	1,000,363	1,175,431
Cash Restricted		**2,549,443**	2,549,443	2,703,016
Receivables - Rates and Rubbish		**2,508,205**	4,170,821	3,443,509
Receivables -Other		**297,162**	301,584	768,822
Inventories		**0**	0	0
		7,637,135	8,022,212	8,090,777
Less: Current Liabilities				
Payables		**(269,485)**	(415,146)	(1,139,121)
Loan Liability		**(132,021)**	(135,196)	(117,951)
Provisions		**(425,541)**	(425,541)	(350,149)
		(827,047)	(975,883)	(1,607,222)
Net Current Asset Position		**6,810,089**	7,046,329	6,483,556
Less: Cash Restricted		**(2,549,443)**	(2,549,443)	(2,703,016)
Add Back: Component of Leave Liability not Required to be funded		**229,923**	229,923	50,000
Add Back: Current Loan Liability		**132,021**	135,196	117,951
Adjustment for Trust Transactions Within Muni		**0**	0	(2,250)
Net Current Funding Position		**4,622,590**	**4,862,005**	**3,946,241**

TOWN OF NARROGIN
NOTES TO THE STATEMENT OF FINANCIAL ACTIVITY
FOR THE PERIOD ENDED 31 AUGUST 2014

Note 4: CASH AND INVESTMENTS

	Interest Rate	Unrestricted $	Restricted $	Trust $	Total Amount $	Institution	Maturity Date
(a) **Cash Deposits**							
Municipal Account	0.40%	2,279,725			2,279,725	NAB	On-Call
Cash Floats - Admin		800			800		
Library		150			150		
Homecare		100			100		
NRLC - Till 1		600			600		
Refuse Site		100			100		
Petty Cash - Admin		300			300		
Library		200			200		
Homecare		350			350		
Reserve Account			4,653		4,653	NAB	
Trust Account	0.05%			67,525		NAB	On-Call
(b) **Term Deposits**							
Municipal		0			0		
Reserve Term Deposit	3.56%		2,544,790		2,544,790	NAB	30/09/2014
					0		
					0		
					0		
(c) **Investments**							
					0		
Total		2,282,325	2,549,443	67,525	4,831,768		

Comments/Notes - Investments

TOWN OF NARROGIN
NOTES TO THE STATEMENT OF FINANCIAL ACTIVITY
FOR THE PERIOD ENDED 31 AUGUST 2014

Note 5: MAJOR VARIANCES

Comments/Reason for Variance

5.1 OPERATING REVENUE (EXCLUDING RATES) - PROGRAM

5.1.1 GOVERNANCE
Nil
5.1.2 GENERAL PURPOSE FUNDING
Nil
5.1.3 LAW, ORDER AND PUBLIC SAFETY
Nil
5.1.4 HEALTH
Nil
5.1.5 EDUCATION AND WELFARE
Timing Difference
5.1.6 HOUSING
Nil
5.1.7 COMMUNITY AMENITIES
Nil
5.1.8 RECREATION AND CULTURE
Timing Difference
5.1.9 TRANSPORT
Timing Difference
5.1.10 ECONOMIC SERVICES
Nil
5.1.11 OTHER PROPERTY AND SERVICES
Nil

Please note that due to Rhona being on leave and Colin preparing the Annual Financial Statements only basic responses have been provided.

Note 5: MAJOR VARIANCES

Comments/Reason for Variance

5.2 OPERATING EXPENSES - PROGRAM

5.2.1 GOVERNANCE
Timing Difference
5.2.2 GENERAL PURPOSE FUNDING
Nil
5.2.3 LAW, ORDER AND PUBLIC SAFETY
Nil
5.2.4 HEALTH
Nil
5.2.5 EDUCATION AND WELFARE
Timing Difference
5.2.6 HOUSING
Nil
5.2.7 COMMUNITY AMENITIES
Timing Difference
5.2.8 RECREATION AND CULTURE
Timing Difference
5.2.9 TRANSPORT
Timing Difference
5.2.10 ECONOMIC SERVICES
Timing Difference
5.2.11 OTHER PROPERTY AND SERVICES
Timing Difference

Please note that due to Rhona being on leave and Colin preparing the Annual Financial Statements only basic responses have been provided.

Note 5: MAJOR VARIANCES

Comments/Reason for Variance

5.3 CAPITAL REVENUE

5.3.1 PROCEEDS FROM DISPOSAL OF ASSETS
Nil

5.3.2 PROCEEDS FROM NEW DEBENTURES
Nil

5.3.3 PROCEEDS FROM SALE OF INVESTMENT
Nil

5.3.4 PROCEEDS FROM ADVANCES
Nil

5.3.5 SELF-SUPPORTING LOAN PRINCIPAL
Nil

5.3.6 TRANSFER FROM RESERVES (RESTRICTED ASSETS)
Timing Difference

Please note that due to Rhona being on leave and Colin preparing the Annual Financial Statements only basic responses have been provided.

TOWN OF NARROGIN
NOTES TO THE STATEMENT OF FINANCIAL ACTIVITY
FOR THE PERIOD ENDED 31 AUGUST 2014

Note 5: MAJOR VARIANCES

Comments/Reason for Variance

5.4 CAPITAL EXPENSES

5.4.1 LAND HELD FOR RESALE
Nil
5.4.2 LAND AND BUILDINGS
Nil
5.4.3 PLANT AND EQUIPMENT
Timing Difference
5.4.4 TOOLS
Nil
5.4.5 FURNITURE AND EQUIPMENT
Nil
5.4.6 INFRASTRUCTURE ASSETS - ROADS
Timing Difference
5.4.7 INFRASTRUCTURE ASSETS - FOOTPATHS
Nil
5.4.9 INFRASTRUCTURE ASSETS - DRAINAGE
Nil
5.4.10 INFRASTRUCTURE ASSETS - PARKS AND OVALS
Nil
5.4.11 INFRASTRUCTURE ASSETS - OTHER
Nil
5.4.12 PURCHASES OF INVESTMENT
Nil
5.4.13 REPAYMENT OF DEBENTURES
Nil
5.4.14 ADVANCES TO COMMUNITY GROUPS
Nil
5.4.15 TRANSFER TO RESERVES (RESTRICTED ASSETS)
Timing Difference

Please note that due to Rhona being on leave and Colin preparing the Annual Financial Statements only basic responses have been provided.

5.5 OTHER ITEMS
Nil
5.5.1 RATE REVENUE
Nil
5.5.2 OPENING FUNDING SURPLUS(DEFICIT)
Nil

TOWN OF NARROGIN
NOTES TO THE STATEMENT OF FINANCIAL ACTIVITY
FOR THE PERIOD ENDED 31 AUGUST 2014

Note 6: BUDGET AMENDMENTS

Amendments to original budget since budget adoption. Surplus/(Deficit)

	Description	Council Resolution	Classification	No Change - (Non Cash Items) Adjust.	Increase in Available Cash	Decrease in Available Cash	Amended Budget Running Balance
				$	$	$	$
	Budget Adoption		Opening Surplus(Deficit)				**5,040**
	Variation between adopted budget opening position and actual		Opening Surplus(Deficit)			34,481	**39,521**
Closing Funding Surplus (Deficit)				**0**	**0**	**34,481**	**39,521**

TOWN OF NARROGIN
NOTES TO THE STATEMENT OF FINANCIAL ACTIVITY
FOR THE PERIOD ENDED 31 AUGUST 2014

Note 7: RECEIVABLES

Receivables - Rates and Rubbish

	Current 31/08/14	Previous 30/06/14
	$	$
Previous Year	229,463	255,442
Rates Levied this year (YTD)	3,648,333	3,618,000
Less Collections to date	(1,282,876)	(3,643,979)
Equals Current Outstanding	**2,594,920**	**229,463**
Net Rates Collectable		
% Collected	33.08%	94.08%

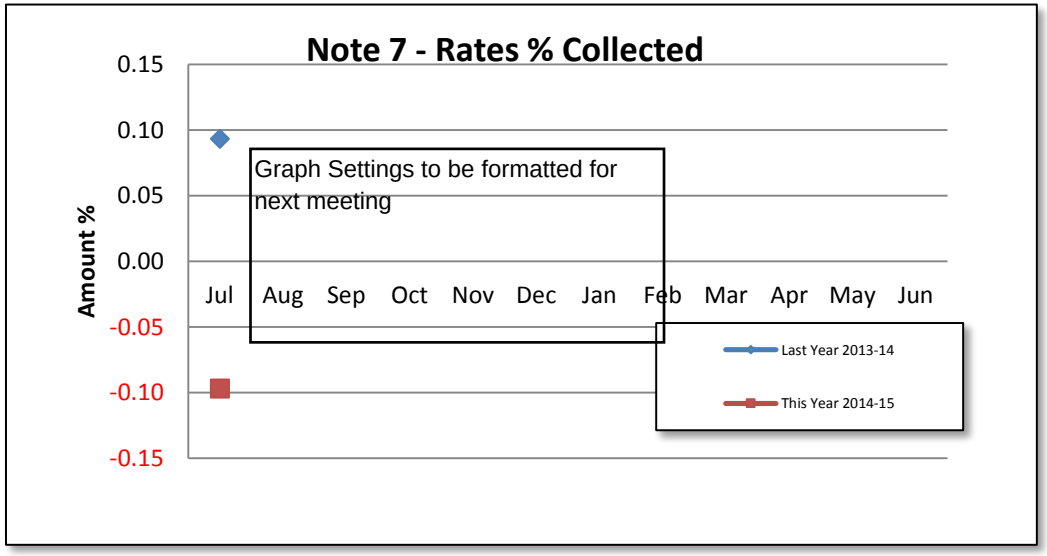

Receivables - General

Current	30 Days	60 Days	90+Days
$	$	$	$
51,515	4,951	40,177	38,438

Total Outstanding **135,081**

Amounts shown above include GST (where applicable)

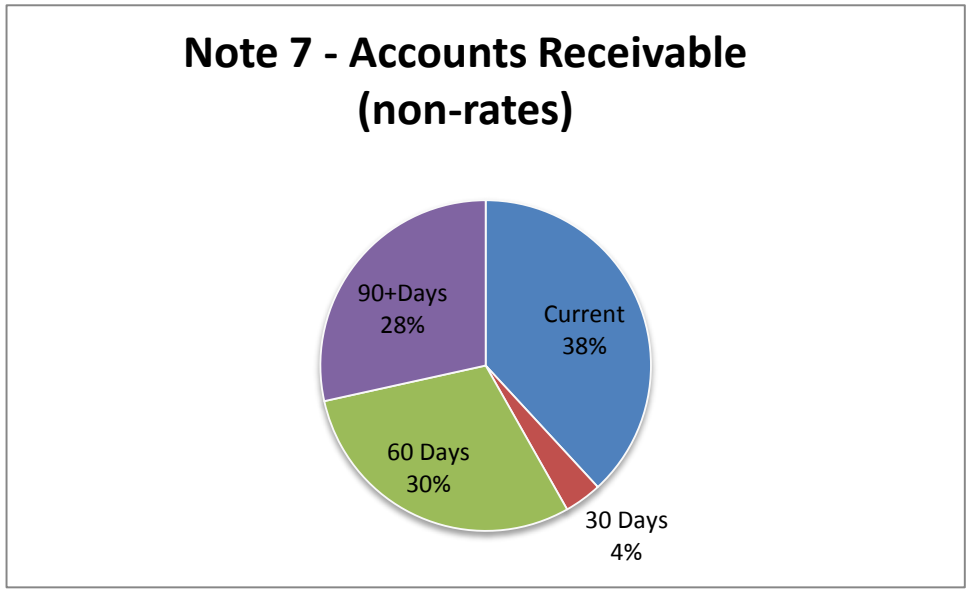

Comments/Notes - Receivables Rates and Rubbish

Comments/Notes - Receivables General

TOWN OF NARROGIN
NOTES TO THE STATEMENT OF FINANCIAL ACTIVITY
FOR THE PERIOD ENDED 31 AUGUST 2014

Note 10: Cash Backed Reserve

Name	Opening Balance	Budget Interest Earned	Actual Interest Earned	Budget Transfers In (+)	Actual Transfers In (+)	Budget Transfers Out (-)	Actual Transfers Out (-)	Transfer out Reference	Budget Closing Balance	Actual YTD Closing Balance
		$	$	$	$	$	$		$	$
Narrogin Promotion	0	0	0	0	0	0	0		0	0
Refuse	320,663	4,656	175	0	0	80,000	0		245,319	320,838
Emergency Service	12,590	183	7	0	0	0	0		12,773	12,597
Fleet Vehicle Replacement	0	0	0	0	0	0	0		0	0
Aged Care Development	708,326	10,284	387	0	0	164,000	0		554,610	708,713
Property Development	0	0	44	0	0	0	0		0	44
J Hogg Memorial	80,530	1,169	0	0	0	35,000	0		46,699	80,530
Plant & Depot	0	0	0	0	0	0	0		0	0
CAT Vehicle Replacement	8,299	120	5	8,000	0	16,000	0		419	8,304
Building	139,750	3,176	76	0	0	0	0		142,926	139,826
NRRC	50,000	726	27	31,221	0	0	0		81,947	50,027
Employee Entitlement	229,808	3,046	115	0	0	32,000	0		200,854	229,923
Plant, Vehicle & Equipment	130,854	2,597	82	50,000	0	60,000	0		123,451	130,936
Unspent Grants and Contribution	780,230	11,328	427	0	0	745,231	0		46,327	780,657
Economic Development	87,000	2,715	48	0	0	0	0		89,715	87,048
IT & Office Equipment	0	0	0	20,000	0	0	0		20,000	0
Tourism & Area Promotion	0	0	0	50,000	0	0	0		50,000	0
	2,548,050	**40,000**	**1,393**	**159,221**	**0**	**1,132,231**	**0**		**1,615,040**	**2,549,443**

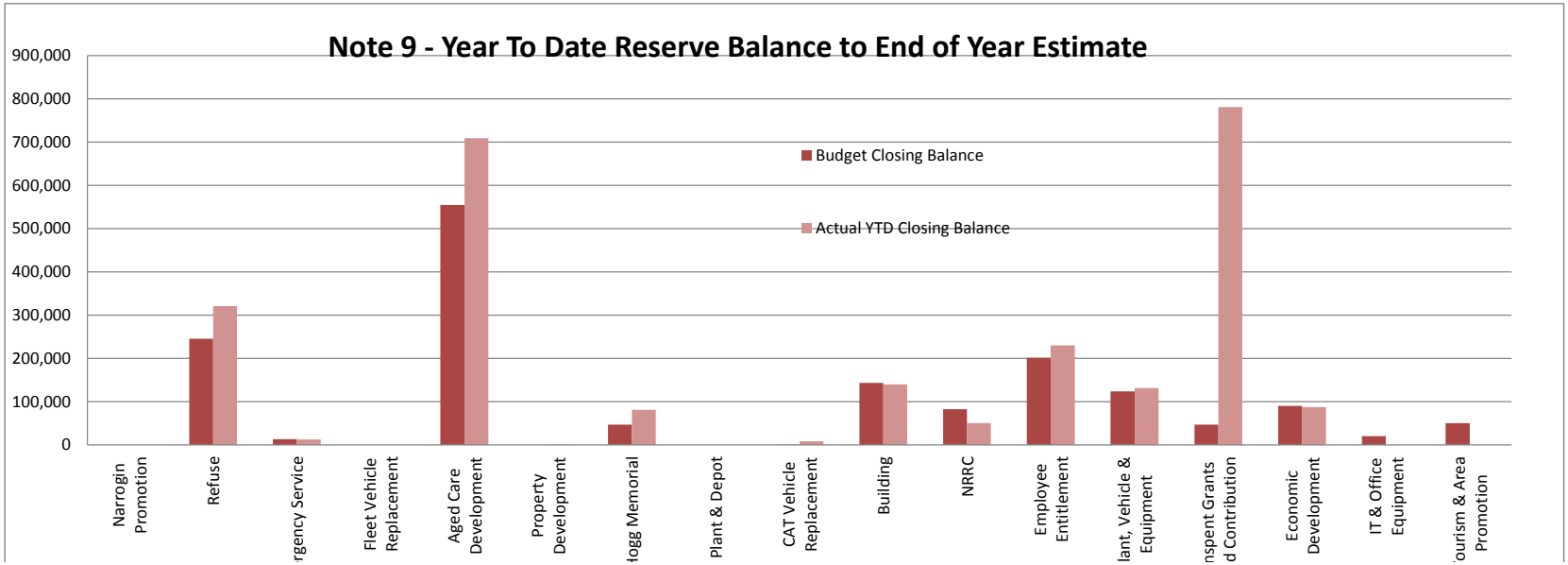

TOWN OF NARROGIN
NOTES TO THE STATEMENT OF FINANCIAL ACTIVITY
FOR THE PERIOD ENDED 31 AUGUST 2014

Note 11: CAPITAL DISPOSALS AND ACQUISITIONS

Actual				Disposals	Current Budget This Year					
Cost	Accum Depr	Proceeds	Profit (Loss)		Original Budget	Revised Budget	YTD Budget	Actual	Variance (Under)Over	
$	$	$	$		$	$	$	$	$	
				OTHGOV - Proceeds on Disposal of Assets						
0	0	0	0	Proceeds on Disposal - CEO Vehicle 2013/14	40,000	40,000	6,666	0	(6,666)	▼
0	0	0	0	Proceeds on Disposal - DCCS Vehicle 2013/14	27,000	27,000	4,500	0	(4,500)	▼
				ANIMAL - Proceeds on Disposal of Assets						
0	0	0	0	Proceeds on Disposal - Ranger Vehicle	15,000	15,000	2,500	0	(2,500)	▼
				HACC - Proceeds on Disposal of Assets						
0	0	0	0	Proceeds on Disposal - Toyota Camry Altise 2013/14	10,000	10,000	1,666	0	(1,666)	▼
				AGEDOTHER - Proceeds on Disposal of Assets						
0	0	0	0	Procced on Disposal CAT Vehicle NGN219	16,000	16,000	2,666	0	(2,666)	▼
0	0	0	0	Proceeds on Disposal CAT (1) Vehicle 2013/14	16,000	16,000	2,666	0	(2,666)	▼
				PLANT - Proceeds on Disposal of Assets						
0	0	26,573	0	Proceeds on Disposal - DTES Vehicle 2013/14	27,500	27,500	4,582	26,573	21,991	▲
0	0	0	0	Proceeds on Disposal - Side Tipping Truck	20,000	20,000	3,332	0	(3,332)	▼
				BUILD - Proceeds on Disposal of Assets						
0	0	0	0	Proceeds on Disposal - Building Surveyor Vehicle 2013/14	26,600	26,600	4,432	0	(4,432)	▼
				ADMIN - Proceeds on Disposal of Assets						
0	0	0	0	Proceeds on Disposal of Manager of Finance Vehicle	16,500	16,500	2,750	0	(2,750)	▼
				COMMUNITY - Proceeds on Disposal of Assets						
0	0	0	0	Proceeds on Disposal - MLC Vehicle NGN0	14,000	14,000	2,332	0	(2,332)	▼
0	**0**	**26,573**	**0**	**Totals**	**228,600**	**228,600**	**38,092**	**26,573**	**(11,519)**	

Comments - Capital Disposal

TOWN OF NARROGIN
NOTES TO THE STATEMENT OF FINANCIAL ACTIVITY
FOR THE PERIOD ENDED 31 AUGUST 2014

Note 11: CAPITAL DISPOSALS AND ACQUISITIONS

Contributions Information				Summary Acquisitions	Current Budget This Year					
Grants	Reserves	Borrowing	Total		Original Budget	Revised Budget	YTD Budget	Actual	Variance (Under)Over	
$	$	$	$		$	$		$	$	
				Inventories						
0	0	0	0	Land for Resale	0	0	0	0	0	↑↑↑
0	0	0	0	Land and Buildings	428,050	428,050	71,330	62,697	(8,633)	▼
				Property, Plant & Equipment						
0	0	0	0	Plant & Equipment	668,302	668,302	111,376	0	(111,376)	▼
0	0	0	0	Furniture & Equipment	45,650	45,650	7,606	7,130	(476)	▼
				Infrastructure						
0	0	0	0	Roads	369,919	369,919	61,648	0	(61,648)	▼
0	0	0	0	Footpaths	71,790	71,790	11,964	0	(11,964)	▼
0	0	0	0	Drainage	41,500	41,500	6,916	0	(6,916)	▼
0	0	0	0	Parks & Ovals	0	0	0	0	0	↑↑↑
0	0	0	0	Townscape	0	0	0	0	0	↑↑↑
0	0	0	0	Other Infrastructure	202,030	202,030	33,662	13,126	(20,536)	▼
0	**0**	**0**	**0**	**Totals**	**1,827,241**	**1,827,241**	**304,502**	**82,953**	**(221,549)**	

Comments - Capital Acquisitions

Note 11: CAPITAL DISPOSALS AND ACQUISITIONS

Contributions				Land & Buildings	Current Budget This Year					
Grants	Reserves	Borrowing	Total		Original Budget	Revised Budget	YTD Budget	Actual	Variance (Under)Over	
$	$	$	$		$	$	$	$	$	
				OTHGOV - Capital Administration Building						
			0	Building Renovation Administration	5,044	5,044	840	5,366	4,526	▲
			0	Administration Building (Capital)	50,000	50,000	8,332	0	(8,332)	▼
				ANIMAL - Building (Capital)						
			0	Animal Pound Building (Capital)	40,000	40,000	6,666	0	(6,666)	▼
				SAN - Building (Capital)						
			0	Regional Tip Site	80,000	80,000	13,332	0	(13,332)	▼
				COM AMEN - Building (Capital) - Other Community Amenities						
			0	Cemetery Toilets - Capital	20,000	20,000	3,332	0	(3,332)	▼
				HALLS - Building (Capital)						
			0	Town Hall Renovations (Stage3)	119,614	119,614	19,934	40,100	20,166	▲
			0	Roofing Railway Institute Hall	3,500	3,500	582	2,980	2,398	▲
			0	John Higgins Community Complex Building Capital	6,500	6,500	1,082	6,793	5,711	▲
				NRRC - Building (Capital)						
			0	NRRC Painting & Renovating (FGF)	6,605	6,605	1,100	0	(1,100)	▼
				LIB - Building (Capital)						
			0	Library Building Upgrade	0	0	0	95	95	▲
			0	Libray Building (Capital)	47,500	47,500	7,916	0	(7,916)	▼
				AERO - Building (Capital)						
			0	Land for Aerodrome	30,000	30,000	5,000	0	(5,000)	▼
				TOUR - Building (Capital)						
			0	Electrical Ugrade Caravan Park	0	0	0	1,550	1,550	▲
			0	Caretakers Cottage Refurbishment Caravan Park	0	0	0	5,718	5,718	▲
			0	Transportable Caravan Park	0	0	0	95	95	▲
			0	Caravan Park Renovations	19,287	19,287	3,214	0	(3,214)	▼
0	**0**	**0**	**0**	**Totals**	**428,050**	**428,050**	**71,330**	**62,697**	**(8,633)**	

Note 11: CAPITAL DISPOSALS AND ACQUISITIONS

Contributions				Plant & Equipment	Current Budget This Year					
Grants	Reserves	Borrowing	Total		Original Budget	Revised Budget	YTD Budget	Actual	Variance (Under)Over	
$	$	$	$		$	$	$	$	$	
				OTHGOV - Capital Plant & Equipment						
			0	1NGN CEO Vehicle	47,000	47,000	7,832	0	(7,832)	▼
			0	0NGN DCCS Vehicle	37,000	37,000	6,166	0	(6,166)	▼
				ANIMAL - Plant & Equipment (Capital)						
			0	NGN417 RO Vehicle	31,000	31,000	5,166	0	(5,166)	▼
				HACC - Plant & Equipment (Capital)						
			0	Aged Care Bus	268,802	268,802	44,800	0	(44,800)	▼
				CHCP - Plant & Equipment (Capital)						
				NGN847 Homecare (HACC) Vehicle	24,000	24,000	4,000	0	(4,000)	
				AGEDOTHER - Plant & Equipment (Capital)						
			0	NGN219 CATS Vehicle	24,000	24,000	4,000	0	(4,000)	▼
			0	NGN219 CATS Vehicle	24,000	24,000	4,000	0	(4,000)	▼
				PLANT - Plant & Equipment (Capital)						
			0	NGN00 DTES Vehicle	35,000	35,000	5,832	0	(5,832)	▼
			0	1BBN838 Side Tipping Truck Purchase	100,000	100,000	16,666	0	(16,666)	▼
				BUILD - Plant & Equipment						
			0	NGN2 BS Vehicle	27,500	27,500	4,582	0	(4,582)	▼
				ADMIN - Plant and Equipment (Capital)						
				002NGN MF Vehicle	25,000	25,000	4,166	0	(4,166)	
				COMMUNITY - Plant & Equipment (Capital)						
				NGN0 MLC Vehicle	25,000	25,000	4,166	0	(4,166)	
0	**0**	**0**	**0**	**Totals**	**668,302**	**668,302**	**111,376**	**0**	**(111,376)**	

Contributions				Furniture & Equipment	Current Budget This Year					
Grants	Reserves	Borrowing	Total		Original Budget	Revised Budget	YTD Budget	Actual	Variance (Under)Over	
$	$	$	$		$	$	$	$	$	
				OTHGOV - Capital Furniture & Equipment						
			0	Corporate Additional Server	25,000	25,000	4,166	0	(4,166)	▼
				LIB - Furniture & Equipment (Capital)						
			0	Airconditioner Upgrade	13,500	13,500	2,250	0	(2,250)	▼
				ADMIN - Furniture & Equipment (Capital)						
			0	Folding Machine	7,150	7,150	1,190	7,130	5,940	▲
0	**0**	**0**	**0**	**Totals**	**45,650**	**45,650**	**7,606**	**7,130**	**(476)**	

TOWN OF NARROGIN
NOTES TO THE STATEMENT OF FINANCIAL ACTIVITY
FOR THE PERIOD ENDED 31 AUGUST 2014

Note 11: CAPITAL DISPOSALS AND ACQUISITIONS

Contributions				Roads	Current Budget This Year					
Grants	Reserves	Borrowing	Total		Original Budget	Revised Budget	YTD Budget	Actual	Variance (Under)Over	
$	$	$	$		$	$	$	$	$	
				ROADC - Roads (Capital) - Council Funded						
			0	Fortune Street	103,300	103,300	17,216	0	(17,216)	▼
			0	Glyde Street	12,880	12,880	2,146	0	(2,146)	▼
			0	Gray Street	35,380	35,380	5,896	0	(5,896)	▼
			0	Havelock Street	10,000	10,000	1,666	0	(1,666)	▼
			0	Grant Street	23,280	23,280	3,880	0	(3,880)	▼
			0	Burns Street	14,238	14,238	2,372	0	(2,372)	▼
				ROADC - Roads (Capital) - Roads to Recovery						
			0		0	0	0	0	0	↑↑↑
				ROADC - Roads (Capital) - Regional Road Group						
			0	Federal Street - Renewal (RRG)	170,841	170,841	28,472	0	(28,472)	▼
				ROADC - Roads (Capital) - Black Spot						
			0		0	0	0	0	0	↑↑↑
				ROADC - Roads (Capital) - Flood Damage						
			0		0	0	0	0	0	↑↑↑
0	**0**	**0**	**0**	**Totals**	**369,919**	**369,919**	**61,648**	**0**	**(61,648)**	

Contributions				Footpaths	Current Budget This Year					
Grants	Reserves	Borrowing	Total		Original Budget	Revised Budget	YTD Budget	Actual	Variance (Under)Over	
$	$	$	$		$	$	$	$	$	
				ROADC - Footpaths (Capital)						
			0	Footpaths (Capital) - (SPARE)	71,790	71,790	11,964	0	(11,964)	▼
0	**0**	**0**	**0**	**Totals**	**71,790**	**71,790**	**11,964**	**0**	**(11,964)**	

TOWN OF NARROGIN
NOTES TO THE STATEMENT OF FINANCIAL ACTIVITY
FOR THE PERIOD ENDED 31 AUGUST 2014

Note 11: CAPITAL DISPOSALS AND ACQUISITIONS

Contributions				Drainage	Current Budget This Year					
Grants	Reserves	Borrowing	Total		Original Budget	Revised Budget	YTD Budget	Actual	Variance (Under)Over	
$	$	$	$		$	$	$	$	$	
				ROADC - Drainage (Capital)						
			0	Mokine Road Drainage Works	41,500	41,500	6,916	0	(6,916)	▼
					0				0	
0	**0**	**0**	**0**	**Totals**	**41,500**	**41,500**	**6,916**	**0**	**(6,916)**	

Contributions				Other Infrastructure	Current Budget This Year					
Grants	Reserves	Borrowing	Total		Original Budget	Revised Budget	YTD Budget	Actual	Variance (Under)Over	
$	$	$	$		$	$	$	$	$	
				SEW - Infrastructure Other (Capital)						
			0	Pump - Centre Sports	6,562	6,562	1,092	0	(1,092)	▼
				REC - Infrastructure Other (Capital)						
			0	Thomas Hogg Oval Electrical Upgrade	35,000	35,000	5,832	0	(5,832)	▼
			0	Outdoor Basketball Halfcourts	17,968	17,968	2,994	0	(2,994)	▼
			0	Playground Equipment	20,000	20,000	3,332	0	(3,332)	▼
			0	Mackie Park Shelters	15,000	15,000	2,500	0	(2,500)	▼
			0	Fox Lair	10,000	10,000	1,666	0	(1,666)	▼
			0	Town Clock	12,500	12,500	2,082	0	(2,082)	▼
				NHLP - Infrastructure Other (Capital)						
			0	NHLP - Gnarojin Creek infrastructure	0	0	0	13,126	13,126	▲
				ROADC - Infrastructure Other (Capital)						
			0	Street Furniture	20,000	20,000	3,332	0	(3,332)	▼
			0	Street Lighting - Decorative	40,000	40,000	6,666	0	(6,666)	▼
				TOUR - Infrastructure Other (Capital)						
			0	Banner Poles	25,000	25,000	4,166	0	(4,166)	▼
0	**0**	**0**	**0**	**Totals**	**202,030**	**202,030**	**33,662**	**13,126**	**(20,536)**	

TOWN OF NARROGIN
NOTES TO THE STATEMENT OF FINANCIAL ACTIVITY
FOR THE PERIOD ENDED 31 AUGUST 2014

Note 12: TRUST FUND

Not included in this statement are as follows:

Trust Items	Opening Balance 1-Jul-14	Amount Received	Amount Paid	Closing Balance 31-Aug-14
	$	$	$	$
DoT Licensing	0	0	0	0
TransWA	0	0	0	0
Councillor Nomination Fees	0	0	0	0
Cultural Development	4,820	0	0	4,820
Public Open Space Bonds	49,560	0	0	49,560
Trust Other	250	0	0	250
Crossover/Footpath	7,050	1,000	0	8,050
Town Hall Facility Bonds	2,075	0	0	2,075
Musical Society	300	0	0	300
Narrogin Abbatoir Committee	480	0	0	480
Meat Inspection	1,990	0	0	1,990
Retention Bonds	0	0	0	0
BRB Levy	0	0	0	0
BCITF Levy	0	0	0	0
	66,525	1,000	0	67,525

TOWN OF NARROGIN
NOTES TO THE STATEMENT OF FINANCIAL ACTIVITY
FOR THE PERIOD ENDED 31 AUGUST 2014

Note 13: INFORMATION ON BORROWINGS

Debenture Repayments	Principal 1-Jul-14	New Loans		Principal Repayments		Principal Outstanding		Interest Repayments	
		2014-15 Budget $	2014-15 Actual $	2014-15 Budget $	2014-15 Actual $	2014-15 Budget $	2014-15 Actual $	2014-15 Budget $	2014-15 Actual $
Governance									
Loan 125 - Corporate Software & Server Upgrade	178,857	0	0	42,524	0	136,333	178,857	5,605	0
Recreation & Culture									
Loan 121B - Narrogin Regional Recreation Complex	440,530	0	0	38,916	6,336	401,614	434,194	23,134	4,076
Loan 126 - Town Hall Renovations	257,837	0	0	24,467	0	233,370	257,837	9,719	0
Economic Services									
Loan 124 - Commercial Property	88,879	0	0	23,556	0	65,323	88,879	4,877	0
Loan 127 - Industrial Land Purchase	168,734	0	0	8,894	0	159,840	168,734	7,461	0
	1,134,837	0	0	138,357	6,336	996,480	1,128,501	50,796	4,076

(SS) Self supporting loan financed by payments from third parties.
(SAR) Self Supporting Loan where financed by combination of Specified Area Rate and payment from third parties.
All other loan repayments are to be financed by general purpose revenue.

TOWN OF NARROGIN
STATEMENT OF BUDGET AMENDMENTS
(Statutory Reporting Program)
For the Period Ended 31 August 2014

	Adopted Budget	Adopted Budget Amendments (Note 5)	Amended Annual Budget	Amended YTD Budget (a)
Operating Revenues	$	$	$	$
Governance	14,060		14,060	12,166
General Purpose Funding - Rates	1,090,204		1,090,204	1,089,787
General Purpose Funding - Other	1,164,046		1,164,046	867,167
Law, Order and Public Safety	36,260		36,260	27,425
Health	1,950		1,950	1,449
Education and Welfare	0		0	0
Housing	86,810		86,810	64,986
Community Amenities	328,306	425,000	753,306	304,467
Recreation and Culture	240,300		240,300	181,775
Transport	507,391		507,391	282,078
Economic Services	844,470		844,470	696,664
Other Property and Services	10,000		10,000	9,820
Total Operating Revenue	4,323,797	425,000	4,748,797	3,537,784
Operating Expense				
Governance	(351,988)	9,000	(342,988)	(266,621)
General Purpose Funding	(97,278)	(5,000)	(102,278)	(76,689)
Law, Order and Public Safety	(218,156)		(218,156)	(160,741)
Health	(63,029)		(63,029)	(47,277)
Education and Welfare	0		0	0
Housing	(118,378)		(118,378)	(95,147)
Community Amenities	(1,055,045)	(425,000)	(1,480,045)	(787,947)
Recreation and Culture	(1,650,299)	6,000	(1,644,299)	(1,247,356)
Transport	(1,827,614)	(4,000)	(1,831,614)	(1,376,881)
Economic Services	(1,103,685)		(1,103,685)	(1,138,760)
Other Property and Services	(30,000)		(30,000)	(45,963)
Total Operating Expenditure	(6,515,472)	(419,000)	(6,934,472)	(5,243,382)
Funding Balance Adjustments				
Add back Depreciation	1,988,668		1,988,668	1,491,489
Adjust (Profit)/Loss on Asset Disposal	(22,000)		(22,000)	(5,064)
Adjust Provisions and Accruals	0		0	0
Net Cash from Operations	**(225,007)**	**6,000**	**(219,007)**	**(219,173)**
Capital Revenues				
Grants, Subsidies and Contributions	8,498,418	(4,778,341)	3,720,077	3,220,541
Proceeds from Disposal of Assets	284,000		284,000	189,333
Proceeds from Sale of Investments	0		0	0
Total Capital Revenues	8,782,418	(4,778,341)	4,004,077	3,409,874
Capital Expenses				
Land Held for Resale	0		0	0
Land and Buildings	(2,480,182)		(2,480,182)	(2,442,177)
Infrastructure - Roads	(1,145,682)	176,000	(969,682)	(690,748)
Infrastructure - Public Facilities	(6,309,251)	4,608,341	(1,700,910)	(1,774,295)
Infrastructure - Footpaths	(100,000)		(100,000)	(87,494)
Infrastructure - Drainage	(60,000)		(60,000)	(30,000)
Heritage Assets	(13,000)	(12,000)	(25,000)	(12,500)
Plant and Equipment	(813,500)		(813,500)	(19,250)
Furniture and Equipment	(38,000)		(38,000)	(33,762)
Total Capital Expenditure	(10,959,615)	4,772,341	(6,187,274)	(5,090,226)
Net Cash from Capital Activities	**(2,177,197)**	**(6,000)**	**(2,183,197)**	**(1,680,352)**
Financing				
Proceeds from New Debentures	0		0	0
Proceeds from Advances	0		0	0
Self-Supporting Loan Principal	0		0	0
Transfer from Reserves	373,000		373,000	0
Purchase of Investments	0		0	0
Advances to Community Groups	0		0	0
Repayment of Debentures	(99,264)		(99,264)	(79,955)
Transfer to Reserves	(495,402)		(495,402)	(75,420)
Net Cash from Financing Activities	**(221,666)**	**0**	**(221,666)**	**(155,375)**
Net Operations, Capital and Financing	**(2,623,870)**	**0**	**(2,623,870)**	**(2,054,900)**
Opening Funding Surplus(Deficit)	**2,623,870**		2,623,870	**2,623,870**
Closing Funding Surplus(Deficit)	**0**	**0**	**0**	**568,970**

Indicates a variance between Year to Date (YTD) Budget and YTD Actual data as per the adopted materiality threshold.

11. ELECTED MEMBER'S MOTIONS OF WHICH PREVIOUS NOTICE HAS BEEN GIVEN

- Nil

12. NEW BUSINESS OF AN URGENT NATURE APPROVED BY THE PERSON PRESIDING OR BY DECISION OF THE MEETING

- Nil

13. CLOSURE OF MEETING

Meeting was closed by the Chairman at 8:17pm.